Notice of Joint Safety Committee Meeting - 2021

To: All parties in interest

Date: 09/10/2021

Via: E-Mail Transmission

E-Mail: jweaver@westernlineneca.org

This is a reminder that our next **Quarterly Meeting** of the **California [Red Safety Book] Joint Safety Committee** is scheduled for **Wednesday, September 15, 2021** at **1:00 PM** pacific time at **Cal-Nevada JATC Training Center in Riverside, CA.**

9846 Limonite Ave.
Riverside, CA

The **Meeting Minutes** from our last Safety Committee Meeting held on June 16, 2021 are available for download from the Chapter's website: WesternLineNeca.org

Thanks,
Jules W. Weaver
Chapter Manager

An Outside Line
Chapter Of NECA
WLCC
Western Line Constructors Chapter, Inc.

2540 E Bengal Blvd., Suite 200, Cottonwood Heights, UT 84121

MEETING MINUTES
IBEW 47-1245 / WLCC-NECA JOINT SAFETY COMMITTEE
June 16, 2021
Cal-Nevada JATC – Woodland Training Center

Present:

Mgmt:

AJ Zartman
Lon Peterson
Travis Walser
Raul Guardado
Zach Zuelner
Kellie Whittemore
Ward Andrews
Ed Antillon
Jeremy Aitchison
Leto Wilkins
Ashley Horan
Brian Swatski
Aaron Meeke
Tom Machen
Jeremy Donahoo
Stacy Donahoo
Grant Todd
David MacLauchlan
Chris Hess
Kevin Unverferth
Jeff Rubbo
Adam Mata
Kenny Bruce
Ross M. Cramer
Jules Weaver

IBEW:

Ralph Armstrong
Ralph Kenyon
Ethan Stonecipher
Armando Mendez
Arnold Trevino
Jeremy Newman
Charlie Randall

Cal-NEV JATC/Guest:

Don Jamison
Kyle Saddler
Neil Tolson, EICA

Meeting called to order by Chairman Armstrong at 1:00pm.

Chairman Armstrong welcomed the group to our first in person meeting in over a year and to our new state of the art Training Center here in Woodland, CA. Mr. Armstrong then had everyone introduce themselves.

Previous Minutes:

M/S/C *to approve the* ***Meeting Minutes*** of the Joint Safety Committee Meeting held on ***March 10, 2021***.

Review of Accidents & Incidents:

The updated **Accident** & **Incident Reports** is attached hereto as **Exhibit A.**

Local 1245 - Northern California: as reported by Mr. Armstrong & Mr. Kenyon noted that Local 1245 unfortunately has had 2 recent fatalities both related to vehicle and equipment operator errors a general discussion followed. They noted that they had no additional accidents/incidents to report beyond the accidents or incidents that will be reported on today and included in the Accident & Incident Report attached hereto as **Exhibit A**.

Local 47 - Southern California: as reported by Arnold Trevino and Armando Mendez noted that they had no accidents/incidents to report beyond those accidents or incidents that will be reported on today and those are included in the Accident & Incident Report attached hereto as **Exhibit A**.

Contractor's Reports:

The Contractors present reported on the accidents and incidents in the attached **Exhibit A** and some additional incidents or near misses. The following Contractors noted they had no accidents or incidents to report on today:

Basin Electric Co.
Donahoo, Inc.
Michels Pacific Energy, Inc.
Sturgeon Electric California, LLC.

JATC Reports: Director Jamison noted that they had no other accidents/incidents to report on beyond what has already been reported on today and those incidents set forth in the Accident & Incident Report attached hereto as **Exhibit A**.

Observations: We have had 2 recent fatalities, and both were the result of operator error and once again there are way too many vehicle/equipment accidents that are occurring off and, on the right-of-way, a long general discussion followed. In addition, Mr. Trevino discussed SCE grounding procedures and a general discussion followed.

Exhibits attached hereto:

Exhibit B – Various Wired for Safety Bulletins from SCE
Exbibit C – ET&D OSHA Strategic Partnership Communication
Exhibit D – Various Contractor Safety Talks SDG&E

Old Business:

1. Chairman Armstrong noted that revised Red Safety Book [Red Book] is available through the Locals and the Chapter for those needing copies. In addition, "*pdf*" copies are always available for download on the Chapter's and Local's websites. Also, if you have any proposed changes or clarifications to the current Red Book language, please forward them to Mr. Weaver at jweaver@westernlineneca.org.

2. Mr. Neil Tolson the Executive Director of EICA gave a PowerPoint video presentation on the recently released Sexual Harassment and DOL Harassment Training Courses available through the Safety Wallet platform and sponsored by the Cal-Nevada JATC program. In addition, the Safety Wallet text-based certifications tracking system was discussed and a general discussion followed. Mr. Tolson also gave an update on EICA's crane certification program and specific information on the crane testing that Cal-Nevada JATC has been performing.

3. For the record, the **Red Book Subcommittee** is composed of the following 8 individuals from Labor and Management:

Labor	**Management**
Ralph Armstrong	Ward Andrews
Rod Peterson	Chris Larson
Ralph Kenyon	TBD
Arnold Trevino	TBD

It was noted for the record that the **8 - IBEW /NECA Safety Committee** members per the California Outside Line Construction Agreement are as follows:

Labor Representatives	**Management Representatives**
Ralph Armstrong	Jim Stapp
Ralph Kenyon	AJ Zartman
Rod Peterson	Ward Andrews
Arnold Trevino	Jules Weaver

New Business:

1. A general discussion was held regarding an issue in SCE's area concerning the improper installation of anchors and a general discussion followed.

2. Mr. Weaver showed a new 3D Safety Training Video that is available on the Chapter's website for viewing and download from an Underground Feeder Cut Incident that took place in Denver Colorado in 2014. A general discussion followed.

Next Meeting Date and Location:

Wednesday – September 15, 2021, at 1:00pm at the Cal-Nevada JATC Training Center located in Riverside, CA.

Meeting adjourned at 3:20pm

IBEW 47 - 1245 / WLCC - NECA
3rd Quarter 2021 Accident/Incident Reports

Date Of Incident	Occupation	Type of Incident	Body Part / Root Cause	Description
Contractor Significant Accidents				
1/6/2021	Outside Crew	Injury	Finger Laceration	**Injury - January 6, 2021,** A substation operator and three operator trainees arrived at a substation to take part in a station inspection and validation of the Standard Station Instructions (SSI's). While the substation operator was exiting the vehicle, he greeted the operator trainees from a distance and began to close the door with his left hand, consequently shutting it on his right index finger, which was still in the door jamb. The operator trainees witnessed this action and rushed over to render assistance and first aid to the substation operator. The substation operator immediately notified supervision of the injury and was able to safely drive back on his own to the Switching Center. The substation operator followed the recommendation to go to the Urgent Care, where he received medical attention and three stitches.
1/14/2021	Outside Crew	Injury	Hand Injuries	**Injury - January 14, 2021,** A crew was tasked with grounding and disconnecting the overhead to underground section of a 500 kV line in preparation for inspections and maintenance of underground cable. Trucks were positioned at the line drops and bus connections to begin grounding and removing jumpers to the bus connections. Apprentice lineman and journeyman lineman grounded the line drop at their work location and at the bus, making their bracket ground. With an installed bypass, they removed the jumpers from the line drops and tied them off with a rope to keep from adding additional strain to the current transformer (CT) connection. After they completed their task, they removed their bypass and line drop ground, keeping the bus grounded for inspections. It was identified that the jumpers had not been let down far enough to allow a good gap for separation. Apprentice lineman and journeyman lineman installed another rope on the grounded jumper for a better lead to be tied off. Before the journeyman lineman could move the bucket to retrieve the overhead ground for the line drop, the apprentice lineman reached up and made contact with his hand on the line drop above the phase of the de-energized 500 kV line. The apprentice lineman became unconscious and collapsed in the bucket, hitting his mouth on the edge of the bucket prior to landing on the bucket floor. From the ground, the crew foreman noticed that he could no longer see the apprentice lineman and called out to the journeyman lineman. The journeyman lineman swung out the boom and lowered the bucket to the ground. Due to the lack of cell phone reception, the crew foreman immediately drove out of the Western Transition Station to regain cell phone service and called Emergency Medical Services (EMS). The apprentice lineman was moved to a location easily accessible by EMS. The apprentice lineman regained consciousness and was responsive by the time EMS arrived onsite. The apprentice lineman was transported to a local hospital and was kept overnight and released the next day. The apprentice lineman's electrical entry point was his right thumb, and his exit point was his left middle finger.
1/19/2021	Outside Crew	Injury	Fractured Wrist	**Injury - January 19, 2021,** A heavy equipment operator and a helper were planning to unload a D5 dozer being delivered to Big Creek in support of the Creek Fire Restoration effort. The operator and the helper held a tailboard discussing the task and possible hazards; snowy and icy conditions were discussed. The operator and the helper were unbinding and unchaining the dozer from opposite sides of the trailer. As the operator was walking alongside the trailer, he lost his footing and slipped on the icy surface. The operator extended his right hand out, attempting to break his fall while landing on the ground. He felt pain in his right wrist and thought it was sprained. The operator got up and continued to put the chains and binders away. The operator told the helper that he had fallen and may have sprained his wrist. The helper did not witness the incident. They observed a scrape and some swelling on the operator's hand but continued to finish unloading the dozer. The helper then drove the operator back to his vehicle. The operator contacted his supervisor then safely drove himself to an urgent care where x-rays were taken. It was determined that the operator fractured his wrist. He received medical attention and was released. The helper drove to urgent care to drive the operator back to the hotel after being released from urgent care. The following day the helper drove the operator back to urgent care to pick up his vehicle.

Date Of Incident	Occupation	Type of Incident	Body Part / Root Cause	Description
2/2/2021	Outside Crew	Injury	Finger	**Injury - February 2, 2021,** Journeyman Lineman sustained a laceration to his right index finger while working storm damage in Arnold, CA. While picking up a downed / damaged, cut-out, the employees right index finger inadvertently contacted a shard of broken glass still connected to the shattered fuse tube. The employee proceeded to work another location when he realized his finger was bleeding. He immediately reported the injury to his supervisor(s). Temporary first aid measures were taken to stabilize the employee's injured finger and On-Site Health & Safety was dispatched to his location to render first aid. The employee was able to return to work full duty no restrictions.
2/15/2021	Outside Crew	Injury	Back Injury	**Injury - February 15, 2021,** A crew was replacing a pole in-between a block wall in the corner of a residential backyard. A worker climbed onto the block wall to get a cant hook onto the pole. As the worker was trying to maneuver the pole butt using the cant hook, the cant hook came loose, which caused the worker to lose his balance, fall backwards and land on his back onto a slab of pavers. After complaining of soreness in his back, the worker was taken for medical evaluation.
2/19/2021	Outside Crew	Injury	Eye Swelling	**Injury - February 19, 2021,** A six-man crew was assigned a nighttime outage for a commercial customer. Part of the work included pulling in cable, approximately 100' from the panel to the transformer slab. During the tailboard, the crew decided to use the existing 1/2" polypropylene rope in the duct to help with pulling in the runs of cable. The crew set up a Capstan at the transformer pad to pull in the cable. As a worker was operating the Capstan to pull the cable, the polypropylene pull rope snapped and contacted the worker on the cheek and left eye. The crew called an all-stop and went to assist the worker, who immediately felt a discomfort around his eye and cheek. The worker did not wish to seek medical attention; however, the general foreman ruled on the side of caution and transported the worker for medical evaluation. The worker was later released.
4/1/2021	Outside Crew	Injury	Leg Injury	**Injury - April 1, 2021,** A lineman was completing a reconductor project that included sagging and dead-ending conductor on a structure accessible only by helicopter. The lineman connected to the tower bridge using his fall protection device, then secured the dead-end board (working platform) to the structure and began work. The lineman successfully performed the dead-end and sagging operation. Approximately ten minutes after the conductor tension had been transferred to the dead-end insulators supported on the center phase position of the tower, the existing "U-Strap" (hardware) attachement at the tower failed catastrophically. The hardware failure caused the insulators, rigging and conductor to break away from the tower, which pulled on the dead-end board. This caused the lineman to fall into his fall protection and swing into the tower, which resulted in a leg injury. The injured lineman was transported to the hospital for medial evaluation; it was determined he sustained a deep tissue injury and was discharged the same day.
4/5/2021	Outside Crew	Injury	Laceration	**Injury - April 5, 2021,** A crew was using a crane to replace a deteriorated pole. When pulling the old pole, tension applied by the crane caused the pole to shake and a portion of the glass insulator broke off, hit the roof of the resident's garage and struck the foreman on his right shoulder. The foreman sustained a laceration and received first aid on-site. Property damage to the resident's garage roof.
4/8/2021	Outside Crew	Injury	Minor Injuries	**Injury - April 8, 2021,** A 4-man crew was tasked with replacing one span of secondary conductor and a service. The new triplex was pulled into place using a 5" block (rigging) on a fiber sling attached to the pole. The tension was pulled from the ground using a block and a sand line. After the wire was near sag, the lineman working from a bucket moved into position to begin dead-ending at the pole. Once in position, he called to the ground help to slack off on the tension. When the wire began to slack off, the 5" block shifted and hit the control handle of the boom, which caused the bucket to swing, even though the trigger had not been depressed. The lineman quickly hit the Power Take Off (PTO) dump button, but it did not react, and the bucket continued to move. After the third attempt to dump the PTO, the controls shut down the boom and the bucket stopped moving. At the time the controls shut down, the lineman was pinched between the back of the bucket and the secondary conductor (putting pressure on his rib cage). He was able to squeeze his way out of the pinch point, indicated he was all right but out of breath and requested the crew use the lower controls to lower the boom. The crew successfully lowered the bucket to the ground, immediately called an ALL STOP and shut the truck off to assess the situation. Since the crew was working a short distance from the yard, the foreman elected to drive the lineman to the yard to further evaluate the situation and the lineman's condition with their supervisor. As a precaution, it was determined that the supervisor would transport the lineman to urgent care, where he was treated and released that afternoon with no significant injuries or work restrictions. The lineman is doing well with only some lingering soreness in the affected area. Upon on-site inspection after the incident, it was determined that the control handle linkage in the bucket had broken, which caused the malfunction. The truck is red-tagged until repairs are completed and the PTO dump is inspected.

Date Of Incident	Occupation	Type of Incident	Body Part / Root Cause	Description
5/2/2021	Outside Crew	Injury	Head Lacerations	**Injury - May 2, 2021,** A transmission patrol crew was tasked with operating and closing a sub-transmission switch on a 66kV line. Due to the busy street corner, with large high-profile vehicles, the pole switch was installed on the pole at 10 feet above ground. The lineman on patrol put on his PPE and used the temporary pole steps to climb the wood pole. He climbed up approximately seven pole steps, about six feet off the ground. The lineman positioned himself to throw the switch: he put his hands on the pole switch handle, squatted down and thrusted up into a full-body extension position to close pole switch. As he thrusted up into a full-body extension, the temporary pole step and lag on the street side (supporting his left foot) pulled out at an angle. The lineman's foot slipped down and off the temporary pole step, which caused him to lose his balance and fall into a backward rotation - out of his belt – and clearing both his feet. The lineman's hard hat fell of as he rotated backwards, and he hit the concrete sidewalk, headfirst. The senior patrolman on-site pushed the orange button on his handheld radio, which notified the substation of the emergency. A pedestrian, who witnessed the accident, immediately contacted the local police department. The lineman appeared to have lacerations to the back of his head and was breathing, but unconscious. Emergency medical services arrived within a short period of time and treated the lineman, who was then transported to the hospital. The lineman remains hospitalized.
5/18/2021	Outside Crew	Injury	Multiple Injures	**Injury - May 18, 2021,** A crew was replacing a deteriorated pole. Upon setting the pole, a journeyman lineman removed the sling, 17-ton shackle, and pin (1 ½ inches in diameter) used to install the pole. The pin slipped from the lineman's hand and fell. On its descent, it struck an unknown object on the pole and ricocheted towards a worker standing near a vacuum truck, approximately 12–15 feet away. The pin struck the worker (vacuum truck operator) on the hardhat, puncturing the hardhat and flipping the hardhat forward, striking his face. The vacuum truck operator sustained a laceration to the forehead, which required stitches, a skull fracture, and a facial fracture to the cheek/nasal passage. The crew implemented an all S.T.O.P., called 911, rendered first aid, and contacted an SCE representative. After the vacuum truck operator was transported by ambulance to the hospital, the crew re-tailboarded and safely completed the remainder of the pole replacement. The injured worker was hospitalized and released the following day.
5/26/2021	Tree Crew	Injury	Fracture, Amputation	**Injury - May 26, 2021,** A compliance tree trimming crew was performing hazard tree removal. The foreman was aloft in the bucket truck preparing to rig a branch/trunk for removal. The groundman was dragging brush into the chipper. While feeding cut branches into the chipper, the rigging rope became caught in the brush being fed into the chipper and was pulled into the chipper. The rope then wrapped around the foreman's arm and the groundman's legs, causing serious injuries to both workers. The groundman was pinned against the chipper, but he was able to use the emergency switch to shut off the chipper. Three additional personnel were onsite. One individual assisted the groundman while another lowered the bucket to the ground to assist the foreman. A third worker called 911 and the fire department was the first to respond. The groundman was taken to the nearest hospital and the foreman was airlifted to treatment. Both injured parties are currently listed in stable condition and have been transferred to a local hospital.
5/28/2021	Outside Crew	Fatality	Head Injury	**Fatality - May 28, 2021,** Friday at approximately 0951 hours, a PG&E Electric Distribution Contract employee was fatally injured. A two-man (Foreman and Groundman) crew was tasked with installing ground rods as part of lightning arrestor work in Redcrest (Humboldt). The work location was in an area difficult to access, with steep terrain and a heavy overhead canopy. The crew utilized a John Deere 35G Mini Excavator to access the work location and perform the excavation needed at the site. The crew successfully completed all tasks associated with the project and the Crew Foreman went to get his camera to take pictures of the completed work. The Crew Foreman turned back towards the project site and saw the Groundman jump from the excavator as it was overturning toward the below roadway. The Groundman was struck in the head by the excavator and then pinned down on the ground under the equipment. The Crew Foreman called 911 at approximately 0954. The Rio Del Fire Department arrived at 1020 and performed an extraction of the employee and pronounced him dead at the scene.
7/5/2021	Outside Crew	Injury	Brusing	**Injury - July 5, 2021,** A crew was using a paving machine to pave the road within a substation. A worker was walking alongside the paving machine and as it came a stop, he walked up to the machine and grabbed his water bottle. However, the worker did not know his right foot was underneath the screed (heavy plate which drags across the freshly-poured concrete to give it its proper level), which was being lowered by the operator. The worker yelled "my foot" and the operator raised the screed. The worker was taken to sit down and be assessed for injuries. The worker's big toe showed bruising, and he had some swelling and pain up his foot. Proper notifications were made, the injured worker was taken to a nearby urgent care, and it was concluded there were no fractures or breaks. The worker received first aid and was released with no restrictions.

Date Of Incident	Occupation	Type of Incident	Body Part / Root Cause	Description
7/27/2021	Outside Crew	Injury	Electrical Flash	**Injury - July 27, 2021,** A crew was tasked to work a 1000-MCM cable replacement, which involved changing 1000-MCM aluminum cable to 1000-MCM copper within four vaults, on two 12 kV circuits. After switching was complete and grounds were installed, the crew started work from the farthest vault and worked their way back to the last vault, which was just outside the substation. A foreman and lineman entered the vault to start making up cable components. The lineman had removed 1000-MCM stingers off triple-stacked connectors and hung them over some existing cable, with the other end still attached to the switch on position three. The foreman thought they needed to incorporate their switch into the grounding scheme and closed position three into the bus. However, the bus was energized from the substation through position one on Circuit 2, and a flash occurred. Both individuals were able to exit the vault, and 911 was called. The lineman was transported to the hospital for treatment and is currently in good spirits, awaiting release.
8/9/2021	Outside Crew	Injury	Brusing Possible Fracture	**Injury - August 9, 2021,** A crew was working a scheduled overhead re-conductor job on a 12 kV line. When setting up the bucket truck, the worker operating the outrigger controls set the outrigger on another worker's foot, which caused bruising and a possible fracture.
8/3/2021	Outside Crew	Injury	Dislocated Finger & Laceration	**Injury - August 3, 2021,** Prior to outage work, a foreman and a journeyman construction electrician were relocating and staging steel H-frame pieces in a substation for preassembly. Steel H-frames support 66kV disconnects, and the crew was separating and putting cribbing in-between the stacked pieces so the load could be easily re-picked later, when needed. The foreman operated the forklift, lifting one side of a steel piece so the electrician could slide the cribbing underneath. As the foreman raised the forks, the steel slipped and pinched the journeyman's left index finger between the steel and cribbing. The foreman saw what happened, went to the electrician's aid, and instructed the other crew members to call 911 and guide first responders into the substation. The electrician was transported to the hospital, treated for a dislocated finger and laceration, and released later that night.
8/16/2021	Outside Crew	Injury	Leg Injuries	**Injury - August 16, 2021,** Two crews were tasked with upgrading two single-phase overhead (OH) transformers, installing one single-phase OH transformer, and replacing multiple spans of secondaries on a property line. Due to the extensive work being performed that affected the majority of customers along the tap line, the crews opted to open taps on the source pole to de-energize the primary conductor. Crew 1 began preparing items for the outage down the line. Crew 2 was given the okay to open taps to de-energize the line, take a tap line clearance, and ground the primary in preparation for the day's work. Two workers ascended the pole, successfully opened taps, and grounded the line. When descending the pole, worker 1 reached the communication level and proceeded to climb over the lines, maintaining 100% fall protection. Worker 2 reached the secondaries level and attempted to free-climb over them but lost contact with the pole, fell approximately 20 feet, and sustained head and leg injuries. Emergency services were immediately called, and the injured worker was transported to a hospital where he was treated for a laceration to his head and prepped for surgery on his leg.
8/17/2021	Outside Crew	Injury	Burns/Flash Incident	**Injury - August 17, 2021,** A crew was tasked with replacing a primary structure (pole); the switching program involved four 12 kV circuits. The troublemen and switching center started the switching program and were ready to have a crew perform their steps of the switching program: open taps on the south side of the pole, breaking a parallel between two of the 12 kV circuits. Two workers in a bucket on the north side of the pole opened the first tap, from the main line running north and south to the buck position running west. When the tap was opened, load was dropped from the structure to two open pole switches, and a flash occurred. The flash caused burns to one of the workers, the bucket truck, and orange conductor cover. Emergency services were called, and the injured worker was transported to a local medical hospital and later released. The troublemen de-energized the structure until repairs were made.
8/23/2021	Outside Crew	Injury	Face Burn, Flash Incident	**Injury - August 23, 2021,** A four-man crew was assigned several work orders to complete for the day, the first of which was to replace a secondary handhole (in-ground access/splice box). The crew had replaced the handhole and was in the process of restoring connections when a flash occurred. The crew member performing work at the location sustained burns to his face. The foreman and crew immediately applied burn gel and called emergency services. The worker was transported to a local hospital where he received initial treatment, then was later transferred to Grossman Burn center. Proper notifications were made. While a formal investigation remains pending, preliminary information indicates the worker was in the process of connecting the streetlight wire to a connector bar when his screwdriver slipped and punctured the other bar, which caused a phase-to-phase flash.

Date Of Incident	Occupation	Type of Incident	Body Part / Root Cause	Description
Contractor Circuit Interruption Incidents				
3/25/2021	Civil Crew	CCII	Operator Error	**CCII - March 25, 2021,** While working on a Rule 20 project (taking overhead conductor underground), an underground civil crew foreman was using a pneumatic tool to install the second of two ground rods about eight feet from the riser pole. The foreman noticed smoke coming out of the manhole and a subsequent circuit lock-out, so he immediately got out of the excavation, called an all-stop, and informed the general foreman, who made appropriate notifications. The underground civil crew had a valid USA ticket in place. The line crew that responded to the incident determined the ground rod had been driven through an encased conduit bank that housed an energized 12 kV line; the ground rod struck the line and caused the circuit to lock out. There were no reported injuries.
4/8/2021	Outside Crew	CCII	Operator Error	**CCII - April 8, 2021,** Two substation electricians were assigned to take clearances and apply personal grounds on a 33kV line that was scheduled to be cleared and grounded for a deteriorated pole replacement project. The 33kV switch rack where the electricians were working is a standard operating/transfer bus configuration. In the morning, the electricians successfully applied the 35-foot 4/0 personal grounds to a horizontal section of the overhead bus, approximately 20 feet in the air. At the end of the day, the electricians began the process of removing one of the grounds. One electrician positioned himself halfway up an 8-foot A-frame ladder to remove the ground using a 12-foot grip-all style hot stick, and the other electrician remained on the ground. The electrician removed the clam shell (clamp) of the personal ground from the bus, then vertically lowered the hot stick to the electrician on the ground. In the process of taking control of the hot stick with the personal ground attached, the electrician on the ground stepped back with one foot, lost his footing and lost control of the hot stick. The personal ground contacted the energized 33kV Transfer Bus lead, which caused a flash, tripped the Bus Tie 33kV circuit breaker, and de-energized the Transfer Bus. The crew stopped work and made appropriate notifications. The electricians were able to regroup and complete the project without further incident.
4/28/2021	Outside Crew	CCII	Operator Error	**CCII - April 28, 2021,** After installation of a new 115kV line over a freeway (freeway crossing), a crew arrived on-site to remove 10-foot concrete K-rail sections that had been set up to protect the job site from vehicle traffic. The crew consisted of the traffic control foreman, traffic control flagger, crane operator, oiler and flatbed truck driver. The foreman, oiler and crane operator discussed where to set up the crane, how to remove the K-rails and the proximity of the powerlines. The oiler would also serve as the crane spotter. A 70-ton crane had been de-rated to 40-ton by having counterweights removed so it could be used for the job. To start removal of the K-rails on the west side of the freeway lanes, the crane operator staged the crane on the freeway shoulder, in proximity to the energized 115kV conductors; the flat bed semi-truck to haul away the K-rails was staged on the east side of the crane. The crew rigged and began lifting the first K-rail. As the crane operator boomed up and began to swing towards the flatbed, the crew heard three loud, consecutive "booms." The oiler/spotter witnessed the crane's front tire blow off the wheel hub assembly, and the crane operator witnessed a blue flash in the direction of the boom tip and the overhead 115kV line. The crew immediately called an ALL STOP, ensured everyone on-site was accounted for and there were no injuries. The operator set the K-rail back on the ground, retracted the boom to a safe stowed position and made appropriate notifications. As a precaution after the incident, the crane operator was medically evaluated; he did not sustain any injuries and was cleared for duty. The crane sustained damage on the top of the boom and the right front wheel hub and tire assembly. Minimum Approach Distance (MAD) to energized conductor for a non-qualified electrical worker or crane is 15 feet. It was determined the crane must have been within 21 inches of the 115 kV energized conductor, which induced the arc flash. A qualified electrical worker (QEW) was not on-site. The crane was not grounded.

Date Of Incident	Occupation	Type of Incident	Body Part / Root Cause	Description
4/30/2021	Outside Crew	CCII	Equipment Failure	**CCII - April 30, 2021,** Following the replacement of underground cable from the east 16kV operating bus to the capacitor switcher, two substation operators (SO) received orders to return the #2 16kV capacitors to service. The cable crew was still on property, out of the switch rack. SO1 would perform the actual switching and SO2 would be the checker; both operators verified the switching program. When closing the second disconnect during switching, the operators heard some "spit" (electrical sound) different than normal and then also successfully closed the third bus disconnect. Following the switching, the cable crew heard a momentary crackling noise coming from the #2 16kv capacitor switcher area. The crew communicated this to the SOs, who went over to check the equipment and listen for themselves. However, the noise had stopped. Suspecting a possible blown fuse, the SOs verified the switcher semaphore as open, then checked the fuses for voltage; the fuses checked okay. The SOs and Transmission system operator (TSO) decided to clear the #2 16kV capacitors to further investigate. After checking the #2 16kV switcher open, they proceeded to open the 16kV capacitor bus disconnects and when opening the first disconnect, a flash occurred. SO1 (performing the switching) fell to the ground. The 16kV operating bus and all associated circuits de-energized for approximately 30 seconds. The TSO called the station, verified the SOs were okay and was given the substation status. The TSO implemented STOP work and halted any further switching then contacted his supervisor, communicating that there were still two bus disconnects closed to the #2 16 kV capacitors. It was determined the safest option would be to open the #1 bank 16kV CB and de-energize the east 16kV operating bus, so the two remaining #2 16kV capacitor bus disconnects could be opened safely. This was accomplished without further incident. Preliminary findings indicated there was continuity on the B & C phase of the #2 16kV capacitor switcher while it was open. The capacitor switcher will be inspected.
7/5/2021	Outside Crew	CCII	Operator Error	**CCII - July 5, 2021,** A crew was tasked to replace a pole. The crew took a clearance on the 4kV line, tested the line with a high voltage tester, received no deflection and applied grounds. After grounding, a circuit interruption occurred. The substation was contacted, and the line was re-energized. The crew had failed to recognize discrepancies in the written switching program, which resulted in the crew inadvertently grounding an energized 4kV line. Duration of the outage was approximately five minutes.
7/19/2021	Outside Crew	CCII	Equipment Failure	**CCII - July 19, 2021,** A five-man crew was tasked with changing out a deteriorated pole under No-Test Orders (NTO), with fast curve setting (FCS) enabled on the circuit. When they arrived at the jobsite, the crew walked the job, including inspecting the primary conductor all the way to the adjacent structures to ensure there were no splices or visible damaged spots in the #2 strand copper conductor. The crew framed the new pole and dug the new pole hole without incident. To clear a path for the new pole to be set, two workers began spreading the primary conductor. When they pulled a phase out of the insulator and started to move it out onto the hot arm, the primary conductor pulled apart and caused the circuit to lock out. After the circuit interruption, the switching center called the foreman to ask if they were in the clear and the foreman told the switching center what caused the interruption. A troubleman was dispatched to inspect the line and talk with the crew. After the switching center deemed it safe to proceed, the conductor was safely spliced back together, and the circuit re-energized. Upon close-up inspection of the damaged conductor, it was observed that the copper was annealed (heated and cooled), having possibly been struck by a bullet in the past. No property damage or injuries were reported.
8/2/2021	Outside Crew	CCII	Property Damage	**CCII - August 2, 2021,** A crew was excavating for the installation of a new conduit system, and a worker went to reposition a partially loaded dump truck that was on a slight downhill grade towards the location of the riser pole. The worker entered the cab and, in preparation to place the transmission into first gear, placed one foot on the brake pedal and covered the clutch pedal with his other foot. Simultaneously, he released the air-assisted parking brake, which resulted in the dump truck rolling backwards down the slight grade, towards the riser pole. When the worker realized that he was unexpectedly traveling backwards, he depressed the brake pedal multiple times to no avail, which prompted him to reengage the air-assisted parking brake. Even after he engaged the parking brake, the dump truck continued to move several feet until it came to a rest against the riser pole. When the truck made contact with the pole, one of the crossarms broke, two conductors below the crossarm made contact, and a flash occurred, which caused a circuit interruption. All workers vacated the immediate area. No injuries were reported. Note: it was discovered that the worker moving the dump truck was not the assigned driver and this was his first time moving this vehicle.
8/9/2021	Outside Crew	CCII	Operator Error	**CCII - August 9, 2021,** A crew changed out a 40-foot pole with 25 kVA transformer to a 45-foot pole with 50 kVA transformer on a 12 kV circuit, without incident. The crew was re-energizing the section of line when a branch line fuse blew and caused the circuit to lock out. The foreman and crew failed to identify and review transformer name plate data prior to installation, to ensure transformer voltages were correct for the circuit.

Date Of Incident	Occupation	Type of Incident	Body Part / Root Cause	Description
8/16/2021	Outside Crew	CCII	Operator Error	**CCII - August 16, 2021,** A crew was in the process of removing a leaning limb from a 90-foot eucalyptus tree that sat to the side of an energized line (distance was greater than 20 feet). When the limb was being lowered, a large, unexpected gust of wind caught the limb and pushed it into the conductors. A substation circuit breaker tripped and de-energized the line. Proper notifications were made, and a troubleman was dispatched to examine the conductors. There were no wires down. No injuries.
8/16/2021	Outside Crew	CCII	Operator Error	**CCII - August 16, 2021,** A telescoping grapple saw (TGS) crew was working on a tree removal when the operator identified the tree was too big to safely and successfully remove with the 60-foot TGS equipment. Through their general foreman, the operator requested a climbing crew to assist with the tree removal, and the climbing crew was routed to the TGS location. As the TGS crew waited for the climbing crew, the TGS operator and crew decided to try and remove the top of the tree themselves. The operator cut a piece too large for the TGS to handle, which caused the system to lock the operator out of the controls — a safety mechanism to prevent any damage to the machine. The machine then cut the large tree-top loose and it struck nearby power lines, which caused an outage.
8/23/2021	Outside Crew	CCII	Property Damage	**CCII - August 23, 2021,** A foreman successfully removed the first tree-top of a co-dominant tree, then the crew began to remove the second tree-top. The crew miscalculated the length of the second top and did not use a mechanical advantage to pull it, so as the tree-top came over, it went off-course, and the uncontrolled tree-top impacted the service drop and a communication line.
8/30/2021	Outside Crew	CCII	Operator Error	**CCII - August 30, 2021,** A crew was tasked to replace a deteriorated pole and transformer on a 12 kV circuit, which had recently been cut-over from a 4 kV circuit. The sketch map called to replace the pole as part of the original 4 kV circuit, but the work order packet had been updated with multiple notations and redlines to highlight the changes made between the original pre-field and the completed 12 kV cut-over. The crew completed the pole replacement work without incident. However, the crew replaced the pole and installed a new 4.8 kV transformer, as depicted on the sketch map, instead of re-installing the existing 12 kV transformer. The crew foreman had No Test Orders (NTO) on the 12 kV circuit and when they attempted to energize the 4.8 kV transformer, the transformer installation caused the branch-line fusing (BLF) to operate, which resulted in an unplanned outage. Proper notifications were made and a troubleman assisted the crew in returning the line to normal operation. No injuries or property damage.
8/30/2021	Outside Crew	CCII	Equipment Failure	**CCII - August 30, 2021,** Without incident, a crew replaced a 45-foot dead-end pole on a 12 kV circuit. The crew used a boom-mounted lift arm attached to a digger truck to hold up the conductors when removing the old pole, and when they returned the conductors from the lift arm to the crossarm, the lift arm mounting bracket broke. As a result, the lift arm fell to the side of the digger boom and the conductors slapped together mid-span, which locked out the circuit. The crew called an all-stop, proper notifications were made, the line was inspected and re-energized, and the crew completed the pole replacement without further incident.

Date Of Incident	Occupation	Type of Incident	Body Part / Root Cause	Description
Contractor Other Incidents				
1/14/2021	Outside Crew	Work Procedure Error	Operator Error	**Work Procedure Error - January 14, 2021,** A line crew was in the process of performing tie-ins on streetlights when they inadvertently cut into a 600-pair AT&T communications cable. The crew used a reciprocating saw (Sawzall) to window a facility assumed to be innerduct (CIC). Shortly after cutting into it, they noticed copper fibers coming out and realized they had in fact cut into a 600-pair AT&T cable, causing damage to multiple services. No injuries resulted from the incident and the communications facility has since been repaired. Based on second-hand information and supposition due to the appearance of subsurface installations at previous work locations, the crew assumed the 600-pair AT&T cable was a CIC. This led the crew to cutting into the facility and ultimately led to the WPE.
2/15/2021	Outside Crew	Property Damage	Operator Error	**Property Damage - February 15, 2021,** A groundman was attempting to back a 10-wheel dump truck and vac trailer combination into the yard, adjacent to the Del Monte Substation (with a spotter), when the driver-side front wheel came into contact with a transformer (T-71925) inside of the adjacent yard. The contact caused damage to the transformer's radiator, causing oil to leak from the transformer (slow leak). The workers immediately placed buckets under the area of leakage and are capturing any/all oil. The crew Foreman immediately contacted his GF, Safety Representative, and PSC. During the investigation, it was discovered that the UFM had backed his crew truck, towing the dump trailer through the substation gates, utilizing a spotter. They then parked and dropped the dump trailer in the yard's rear, in front of a tilt deck trailer. The Foreman then pulled the crew truck out of the yard and parked it on Figueroa St. Once the Foreman completed that task, his groundman then maneuvered the 10-wheeler, towing the vac trailer, and positioned the truck and trailer, so he could back in through the yard's gate, utilizing a spotter. Due to the gate's narrow opening (11'-10"), the truck and trailer were pulled forward to reposition the trailer. While backing, the spotter, was checking both sides as the driver was reversing through the gate. Once the trailer successfully made it through the gate, the spotter, stationed at the rear of the trailer on the passenger side of the combination vehicle. As the driver watched his spotter through the passenger side mirror, he contacted the driver side front wheel and the step-down pad-mounted idle transformer (T-71925) radiator, causing damage. Later, it was also discovered that the transformer had large cement barricades surrounding it. The Thursday before the incident (02/11/21), the Foreman decided to remove those barriers, so he would be able to fit additional pieces of equipment.
2/25/2021	Outside Crew	Fallen from Elevation	Wood Pole Failure	**Fallen From Elevation - February 25, 2021,** A lineman was assigned the removal of service, cable TV, and phone cables off a property line pole in preparation to set a new pole. Before climbing the pole, the lineman performed a visual inspection and conducted a sound test using his hammer. The lineman ascended the pole, removed the service, and then descended to the phone and cable TV level. Once he detached the phone cable, the lineman felt the pole begin to lean to the south before continuing to slowly fall. The lineman was able to maneuver to the high side of the pole before the pole came to rest, when the arms touched the ground. The lineman was able to unbelt from his fall protection and step off the pole, onto the ground, without sustaining any injuries.
3/9/2021	Outside Crew	Property Damage	Civilian Drunk Driver	**Property Damage - March 9, 2021,** A crew was tasked with a deteriorated pole replacement on a city street during a night outage. Traffic control crews set up an approved road closure on northbound lanes, which included message boards, arrow boards, barricades, cones and active flagging personnel. Traffic control flaggers directed the crew into their work location within the closed #1 and #2 lanes. The semi tractor-trailer with pole trailer was parked in front of the work area and occupied the #1 lane; a bucket truck was parked off-set within the #2 lane behind the crew's work area, which barricaded the work area for safety while conducting work. The crew completed their tailboard and, while awaiting their clearances, began framing the new structure on the ground. One of the flaggers identified a solo vehicle traveling northbound in the #2 lane at a high rate of speed toward the parked semi tractor-trailer. Before the flagger could react, the third-party driver proceeded through the barricaded road closure, continued in the #2 lane, then slowly started to swerve into the #1 lane where the driver collided head-on into the front of the parked semi tractor-trailer. A flagger and the crew secured the scene and tended to the third-party driver. The other flagger contacted local authorities and the crew foreman contacted his management; all appropriate notifications were made. The third-party driver was taken into custody for driving under the influence. The semi tractor-trailer was towed away and red tagged out-of-service for full inspection. No worker injuries.

Date Of Incident	Occupation	Type of Incident	Body Part / Root Cause	Description
3/30/2021	Outside Crew	Close Call	Equipment Failure	**Equipment Failure - March 30, 2021,** A groundman and general foreman (GF) were tasked with the delivery and pre-set of a 500 kVA three-phase padmount transformer to support a new business installation. Before leaving the yard, the GF conducted a tailboard to address job hazards (including equipment failure), the crew inspected the vehicle and tested the boom. The crew also conducted a pre-lift of the same size transformer to ensure all equipment was operating correctly and planned for tight conditions at the work location, including limited vehicle placement options. The crew arrived safely at the job location, held a second tailboard, and set up the vehicle so the transformer could be offloaded and moved to the passenger side, just to the front of the vehicle. The transformer weight was 6,100 pounds, well within the lifting and angle capabilities of the boom. After lifting the transformer off the truck bed, the operator began to move the load towards the front of the truck. As the operator was nearing the location of the transformer placement, the sand line suddenly broke, which caused the transformer to fall onto the front fender of the vehicle and hit the ground. There were no personnel in proximity to the impact. The crew called an all-stop, ensured all personnel were safe, assessed the situation, contained the transformer oil and hydraulic fluid leakage and contacted supervision. No injuries. All required notifications were made in a timely manner.
4/12/2021	Outside Crew	Close Call	Pilot Error	**Close Call - April 12, 2021,** A helicopter arrived on-site with a new 45' pole tethered to the 50' long line used to transport the structure; the line crew on the ground safely received and guided the pole into the installed SONO tube. Then, without communicating to the ground crew or receiving the cut signal from the crew, the helicopter pilot released the load. When the crew became aware of the premature release, they immediately secured the new structure. The helicopter pilot continued to the designated landing zone (LZ), detached the 50' long line, hot fueled (fueled while aircraft is running) and proceeded back to the helicopter's home base. The line crew had secured the pole with ropes, manually manipulated it into place, safely completed the installation, then returned to the LZ where they made appropriate notifications. No injuries.
4/21/2021	Outside Crew	Property Damage	Operator Error	**Property Damage - April 21, 2021,** A line crew was assigned to complete a wood pole replacement. The foreman conducted a tailboard prior to the start of work to discuss hazards and mitigations, visually inspected the pole and performed a sound test at both the base and four-foot level of the pole to check integrity of the structure. The foreman decided it was safe to continue. A lineman boomed up to begin removing the span guys and primary conductors When he released a span guy (without first securing the pole), the wood pole broke below ground level and fell onto an adjacent residence. The crew conducted an ALL STOP, ensured site safety and made appropriate notifications. Upon further inspection of the pole (about four feet below ground level), a third-party utility conduit bored through the middle of the pole was discovered. The third-party conduit through the base of the wood pole is believed to have caused significant deterioration of the pole below grade. Property damage was sustained by the residence, the pole was removed safely from the home and damages will be repaired. No injuries.
5/6/2021	Outside Crew	Helicopter Accident	Weather	**Helicopter Accident - May 6, 2021,** A crew was in the process of un-clipping a static wire using a helicopter in a Class A external load configuration via skid platforms on either side, and was transporting linemen to tower structures. The helicopter took off from landing zone (LZ) to prepare for un-clipping of the static wire with one lineman on the left-hand skid platform. En route from the LZ to the first tower, the helicopter was struck by a dust devil, causing a loss of control. The pilot stated, "he maintained control to the best of his ability to land the helicopter," resulting in a hard landing and a reportable accident per FAA regulations. No injuries were sustained by the pilot or the lineman.
5/28/2021	Outside Crew	To Be Determined	To Be Determined	**Pole Instability, Crew & Public Safety - May 28, 2021,** SCE Leadership was recently made aware of several contractor resources, throughout the organization, were installing new anchors utilizing an anchor extension in place of the 10-feet anchor rod. There are also indications that some contractors may have cut or altered the length of the 10-feet anchor rod to shorten the depth at which it was buried. SCE is taking immediate action with the contractors to identify these structures and correct this issue in the field, in addition to requiring the contractors to perform internal fact finding and corrective action plans. This work practice creates a significant safety risk to our crews and to the public. To mitigate this risk, there are actions that our foreman, planners, and inspectors can take to identify this type of anchor installation in the field.
7/12/2021	Outside Crew	Close Call	Operator Error	**Close Call - July 12, 2021,** Inside a substation, a worker was driving a forklift to move old equipment to a new location. When driving in reverse, the right front tire hit the personal ground that tied the overhead conductor to the ground system at the base of the supporting pole. As a result, the ground cable was pulled on and its overhead connection strained, which caused the bus conductor support to break and the conductor to fall to the ground.

Date Of Incident	Occupation	Type of Incident	Body Part / Root Cause	Description
7/12/2021	Outside Crew	Vehicle Accident	Operator Error	**Vehicle Accident - July 12, 2021,** A worker was driving westbound up a narrow road and could not see over the hood of the truck due to going uphill. The driver turned wide to clear a secondary pole on the south side of the road, a spot where the road narrows from approximately 18 feet to 12 feet. The driver felt a jolt, heard a thump sound, and realized the truck was off the road but was unable to regain control of the vehicle. The vehicle rolled approximately 25 feet onto its side and got lodged against a tree. No injuries were reported.
7/26/2021	Outside Crew	Close Call	Operator Error	**Close Call - July 26, 2021,** An operator was relocating an excavator, driving with the excavator boom elevated along an established project access road. The operator did not notice the temporary service drop (a low-voltage line) running across the road to an on-site job trailer, and the boom made contact with the line. This put tension on the line and the adjacent poles on either side of the road, which caused the temporary power pole on the southwest side of the road to break, the temporary power pole on the northeast side of the road to dislodge, and the temporary power line to break.
7/26/2021	Outside Crew	Property Damage	Operator Error	**Property Damage - July 26, 2021,** A crew was tasked to replace a 70-foot 66kV transmission pole by setting and transferring SCE lines to a new, adjacent 110-foot pole. The crew would also set a 50-foot pole and transfer another other utility's 34.5kV underbuild. Without incident, the crew set the new pole adjacent to the existing, topped the existing structure to approximately nine feet above ground, transferred conductor to the new pole, and completed work on the new 50-foot structure one span away. The crew then returned to the old pole to remove the remaining nine-foot section. Despite multiple "no parking" signs posted within the work area, a third-party vehicle had been parked there for approximately three days, and the crew had worked around the vehicle. The crew made multiple attempts to have the vehicle towed from the location but due to various complications, the car was never towed. The crew exhausted all avenues to identify the owner of the vehicle without success, so they made the decision to remove the remaining nine-foot pole section with the third-party vehicle still directly next to the pole. The crew attached rigging and additional tag lines to maintain control during removal of the old pole section. As the crew was extracting the old pole, it broke below-grade due to significant rot damage. The pole break caused minimal shock loading, which caused the pole section to bounce around and, unfortunately, it made contact with the third-party vehicle. The crew called an all stop, made notifications to their direct supervisor and contacted the other utility to verify there were no active outages at the location or within the area.
8/9/2021	Outside Crew	Close Call	Operator Error	**Close Call - August 9, 2021,** A worker was driving inside a substation near the north end of a cable trench, which runs north to south, parallel to the east wall. The driver made a sharp right-hand turn too close to the trench, his rear passenger tire drove over the top of the trench cover, and the cover collapsed. The rear tire partially fell into the trench.
8/16/2021	Outside Crew	Close Call	Unsafe Act	**Close Call - August 16, 2021,** A two-man digging crew was tasked to dig for an anchor install on a section of a 12 kV line. The crew verified the active dig ticket and utility paint markings at the location. As the crew excavated using hand tools, they encountered a significant amount of tree roots and hard pan (extremely compacted soil) within the excavation site. In the process of breaking up the hard pan at approximately a two-foot depth, the head of the spade shovel struck and broke an unidentified, privately owned duct, which contained energized 480 V conductor. A small flash occurred when the head of the spade shovel made contact with the conductor housed in the ducting. The crew member immediately moved away from the area and his crew members made sure he was okay. No injuries were reported. The foreman immediately made proper notifications to have the conductor de-energized.
8/30/2021	Outside Crew	Property Damage	Operator Error	**Property Damage - August 30, 2021,** A worker was driving on a narrow mountainous roadway, and when he made a tight right turn, he was blinded by sun glare. Blinded by the glare, he missed the upcoming left curve and, instead, ran his vehicle into the hillside to his right. The worker's vehicle rolled over after traveling 25 feet along the hillside.
8/30/2021	Outside Crew	Property Damage	Operator Error	**Property Damage - August 30, 2021,** When removing a deteriorated pole, the crew used the grabbers of the line truck to help shake the pole loose. The pole made contact with a nearby brick wall and a few top bricks were knocked loose, the mortar around the bricks broke free, and the wall slightly shifted side-to-side.

Date Of Incident	Occupation	Type of Incident	Body Part / Root Cause	Description
Customer Accidents/Incidents				
5/2/2021	Civil Crew	Significant Injury	Electrocution	**Significant Injury - May 2, 2021,** Around 0100, a two-man civil crew were electrocuted while providing civil support to a PG&E electric crew, in response to an emergency resulting from from a compromised pole. Preliminary investigation indicates the electrocution occurred when the PG&E digger derrick contacted an energized overhead conductor. The two employees are being observed and recovering at the Arroyo Grande Community Hospital.

WIRED FOR SAFETY

July 7, 2021

Topics, trends, known hazards and best practices for use in tailboards to help keep yourselves safe, in all lines of work.

Primary Hazard Focus: Slips, Trips and Falls

SAFETY OBSERVATIONS

No observation but check out this information on this edition's primary hazard..

62% Of falls happen on the same level, resulting from slips and trips, 2018.[1]

Slips happen where there is too little friction or traction between the footwear and the walking surface.

Trips happen when your foot collides (strikes, hits) an object causing you to lose balance and, eventually fall.

Common Causes

Slips	Trips
• wet/damp surfaces (vegetation, etc.) • oily surfaces • weather hazards • worn out footwear	• obstructed view • clutter in your way • cables, ropes, equipment, etc. • uneven walking surfaces (steps, thresholds)

[1]U.S. Bureau of Labor Statistics

HISTORY TELLS US

What steps can you take to take the right steps? The U.S. Department of Labor reports that injuries due to slips, trips, and falls are the second-highest cause of days away from work. And, the majority of falls happen on the same surface level – not falls from elevated positions.

That means that just walking around we are getting hurt! We've all done it – slipped on a slick surface, stepped on an object, slid down a slope, lost our footing – the list goes on. But, why do these things happen? How is it that year after year, we remain plagued by slips, trips, and often the falls that result? Perhaps it's because we take the task of walking for granted…but clearly, we shouldn't. Being intentional about our safety is not limited to the hands-on tasks we perform - it includes *getting ourselves* where we need to be in order to perform those tasks. But, how often do we view it that way? Sure, we focus on safe bucket, lift and driving operations but how about we start focusing on the most common method of transportation, within our control?

Really, this involves staying aware, like we do for so many other aspects of the work we perform. So, we'll help each other maintain a jobsite or work area free of tripping hazards. We'll keep our eyes on the path in front of us in case a crew member or mother nature left something behind since we walked this area last – or maybe we're walking through it for the first time. Of course, in order to have line-of-sight to the path ahead, we won't be carrying or walking behind anything that obstructs our view…right? We'll focus on where and how to place our feet when walking in areas with potential uneven terrain or sand, gravel, moisture, etc. on the ground. We'll consider the pace at which walk and if we need to adjust. We'll wear proper footwear in good condition. We'll look for and move obstructions in our task area to maximize our maneuverability. And, finally, we'll carry loads in such a way that we can free-up a hand to help catch or balance ourselves in the event a slip or trip can't be prevented.

Remember, the task of getting from A to B may be mundane, but it's still a task we need to perform. So, let's give it the attention it deserves.

Let's make slips, trips and falls the exception, not the rule.

- If I am going to be working in a remote area, what is my emergency procedure?
- How much can I carry and keep myself stable? Do I need multiple trips?
- Do I pick my feet up when I walk or just shuffle along?
- What terrain will we be working on or around and who will bring it up in the tailboard?
- Do I have clear line-of-sight to where I am going to place my foot?
- If I am walking through deep brush or debris, how can I determine if there is something hazardous underneath?
- What can I do to ensure we maintain a job site free of tripping hazards?
- What is around me that I risk stepping on or tripping over?
- Do I have enough space to maneuver for this task or are there obstacles where I need to step?
- Is the terrain even? Slippery? Unstable? How can I safely traverse it?
- Do I need to adjust my walking pace?
- What size of step can I safely take here?

Ask yourself: Do I make it comfortable for others to "see something, say something?

Exhibit B

SOUTHERN CALIFORNIA EDISON
Energy for What's Ahead

A SELECTION OF INCIDENTS & CLOSE CALLS | 2019-PRESENT

Year	Incident Summary
2021	• A handline was blowing into a chain link fence adjacent to the worksite and got caught up in the barbed wire. When a worker attempted to free-up the handline**, he stumbled** and cut his shin on an anchor plate that was lying on the ground nearby, staged for installation. The worker received treatment for a laceration at a nearby emergency room. • A worker was conducting a pre-activity site sweep prior to line crews accessing the site. While walking above the bank of a stream, the worker's boot made contact with the exposed tip of a metal t-post, which **caused the worker to trip**, fall and sustain an abrasion on the right shin from the exposed t-post. The body of the t-post was buried/driven into the substrate, which left the top 6"-8" of the white t-post exposed above the surface; there was no cap on the t-post. • A worker walking back to the truck to get something stepped on a rock partially buried in the sand and **rolled his ankle**. He had minimal pain, continued working the rest of the day and when he got home that afternoon, he removed his boot to find a small amount of bruising and swelling on the side of his ankle. The worker self-treated with ice and stayed off of that foot; the swelling reduced a bit but the pain lingered. The worker was sent to a medical facility for evaluation and x-rays revealed a hairline fracture to the ankle. • A worker was walking up a sandy incline when **his left foot slipped** and his weight transferred to the right knee, which caused pain in the knee. • A worker was attempting to gain access to poles on the other side of a wash and encountered a puddle-size stream of water running along the middle that was too wide for him to fully step over. When he stepped to the other side of the stream, **his foot slipped** on algae, and he fell on his arm. In the process his company keys fell out and were lost, as the stream led to a bigger pool of water nearby. The worker reported sprain-like pain between his wrist and elbow. • When patrolling through a steep, heavily forested area, a worker was using a walking stick but **tripped** and hit her right shin when she stepped up onto a log. Swelling occurred and a bruised formed in the area. Once in cell range, the worker notified supervision. • When walking from one crew to another crew to perform crew observation and audit duties, a worker inadvertently stepped onto a small area of black ice and **slipped to the ground**. Road conditions in that area transferred from very dry to damp with patches of ice due to the area being shaded by several trees. The worker had discomfort in his right ankle and was transported by supervision to a nearby medical clinic. The worker sustained a fractured ankle. • A worker was inspecting overhead (OH) lines for routine vegetation compliance in an area with snow on the ground from a previous storm. To get a closer look at a few trees, the worker was on a hillside where OH lines left the road, and the worker stepped on a patch of snow covering slippery brush. **The worker slipped** but did not fall, slightly jerking the left knee. The worker did not think much of it at the time, continued with inspections and the next morning noticed soreness in the knee. The worker did not report the incident to supervisor in a timely manner, until almost two days later.
2020	• A worker left the work area and followed the path down a set of stone stairs (with handrail) to a dirt path that led to the restroom. The dirt path was covered by snow from winter storms and the worker said once he stepped away from the stair-handrail section, he slipped and fell backwards on to the snow-covered path. He stated that as he fell, he felt his knee twist and pop. The worker had a headache, developed a small (3cm-wide) bump on the back of his head and was disoriented, which suggested he may also have hit his head during the fall. After he fell, the worker called out to his fellow workers but did not receive a response, so he got up and walked back up the trail and stairs to the work area. Once back at the work area, the crew assisted him.

Think about it: Am I distracted by conversation while walking, such that I'm not paying attention to the path in front of me?

Exhibit B

A SELECTION OF INCIDENTS & CLOSE CALLS | 2019-PRESENT, cont.

Year	Incident Summary
2020, *cont.*	• While working in the field on uneven off-road terrain, a worker **stepped awkwardly** on a mound of dirt. Shorty after, the worker began to feel pain in the right knee while walking down hill on the same uneven off-road terrain; pain continued to worsen as he drove himself back to his work base. • A worker placed her backpack and purse on the floor behind her chair against a wall and the purse strap was in the walkway. As another worker left the meeting, her **foot caught on the strap**. • A worker was walking in an office building and **tripped on the carpet**, which resulted in a cut on his bottom lip. • Two workers came back from lunch and noticed a worker sitting on the ground in the facility parking lot; she looked dazed and had dirt smeared on the right side of her face. The workers assisted her and also noticed some scabbing happening around her mouth area. The worker explained she had **slipped on something** that looked like a battery, could not break her fall and fell on her face. • While inspecting a trench, **a worker slipped** on loose gravel, **lost his footing** and slipped partially into the trench. The worker broke his fall with his arm and felt discomfort in the knee and wrist as well as tightening of his back muscles. • A worker was walking down a grass slope looking for a pad mounted transformer and **rolled their ankle.** • On his last stop of the day, a worker was walking in a backyard with debris, when the sole of his boot got stuck on some debris and **caused him to slip** and twist his ankle. • At night, while framing a pole to be replaced, a worker forgot how close he was to a 10 feet-deep hole that had previously been dug to set the new pole. The worker miscalculated his surroundings, stepped backwards, **slid down to the bottom** of the exposed hole and landed on his feet. The worker was safely helped out of the hole and offered additional assistance but declined. The crew re-tailboarded and called attention to the hazards associated with the incident. Work was completed without further incident.
2019	• When a worker stepped over a three-inch-high beam to enter a building, he **twisted his knee** and ankle. No pain occurred that day, but the worker felt pain in his knee the next day and reported the incident. • A worker put on blue paper overalls for asbestos protection; the overalls were too large and two feet of the legging slipped down his leg. During containment entry, the person walking behind him stepped on the loose, trailing legging, which **caused the worker to fall forward**. The worker was not hurt. The requirement for the containment entry was to use the large blue overalls as the second layer of protection, different than the normal second layer PPE. The loose coveralls prompted a change in protective attire for the whole entry team for the remainder of the entry. The team donned rubber booties, which controlled the excess blue paper material for all the team members. • When carrying guy-wire material/hardware on uneven ground across a culvert/ditch embankment, a **worker stumbled, lost his balance and fell** onto his left side, which fractured his left collar bone. The job was stopped, and the foreman transported the worker to a nearby hospital. • When a worker was attempting a service turn-on order, he walked toward the meter, thought he heard something, **looked back and tripped** over uneven pavement. The worker may have a fractured wrist. • **A worker slipped** on clear ice and fell at the entrance threshold of a facility. The worker braced the fall with their left hand and sustained a small cut to the index finger.

A SELECTION OF INCIDENTS & CLOSE CALLS | 2019-PRESENT, cont.

Year	Incident Summary
2019, *cont.*	• **A worker tripped and fell** over a pallet near a switch rack and sustained a cut to the palm of their right hand upon landing. • When working in uneven terrain, **a worker lost balance, fell and broke a leg**. • A worker's vision was obstructed by the items she was carrying, so she **missed the entrance step and fell.** Worker notified her manager and declined additional assistance. • A crew was in the process of switching in a vault located in the middle of the street. One of the workers **stepped into a pothole** about 4 inches deep, fell to the ground and hurt his leg. • A worker was carrying a jackhammer up a hillside, **lost their footing** and smashed a pinky finger. • A worker had eyes forward when approaching a crossing path, misjudged where the curb was in accordance with her steps and **fell forward** off the curb toward the walking pathway. The worker dropped the items in her hands and put her hand out in front of her to protect her face as she fell. On impact, the worker stated she felt a pop in her shoulder. Several workers observed the incident, came to the worker's aid and called her supervisor, who drove the worker to a nearby emergency room.

ADDITIONAL RESOURCES

Number of non-fatal injuries and illnesses involving days away from work by selected event or exposure, private construction industry, 2015-19[2]

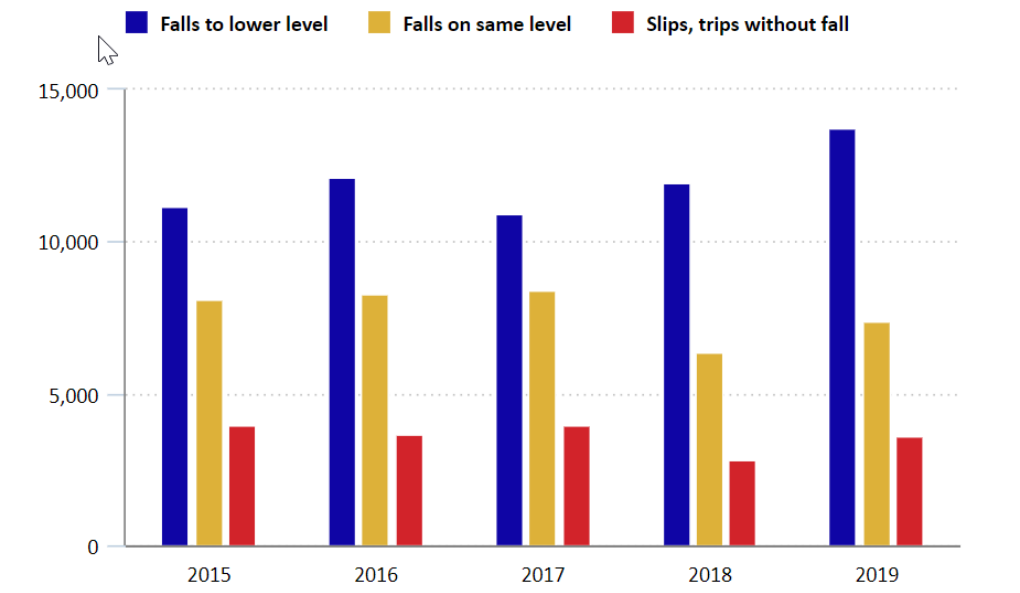

[2]U.S. Bureau of Labor Statistics

WIRED FOR SAFETY

July 21, 2021

Topics, trends, known hazards and best practices for use in tailboards to help keep yourselves safe, in all lines of work.

Primary Hazard Focus: Public Safety

How will you use your training today?

HISTORY TELLS US

Train. Work. Refresher Training. Repeat. As a working professional, you go through hours of training, both formal and on-the-job, to prepare for your line of work.

Day in and day out, you apply that training within the context of your work scope — some skills are used regularly, while others are used infrequently or only in an emergency. Either way, you can perform with confidence (but not overconfidence!) because in a variety of situations, you understand the importance of being aware of your surroundings, being prepared for emergencies, using your resources, and working as a unit or an individual to safely accomplish a task.

Then, there are those rare moments when that training is applied to assist others in a way which you are uniquely qualified to do. Perhaps it is lending your expertise to a school project or career day, building a relationship with your local first responders during non-emergency circumstances, helping a friend or family member with a home project because — let's be honest — they are in over their head and could even hurt themselves, or maybe it is the rarest of opportunities when you become part of a random person's life-saving/life-impacting story…by assisting a member of the public.

Whether you rely on your training for big or little moments, the point is, the training you participate in for your job sets you apart from the rest and makes you more prepared than most. Of course, specialized emergency response is best left for those trained in such methods, so we'll do our jobs and let them do theirs!

But, when you are out there driving, excavating, weed abating, inspecting, tree trimming, pole replacing, cable laying, equipment installing, and everything in between, members of the public around you may have no idea just how capable you are…but we know. Much of life is about showing up and one day, if the need arises, you may show up for someone when they least expect it — and demonstrate you are willing to look out for them in the same way we look out for each other.

Being prepared for the unexpected involves planning ahead.

- Are we required to have AEDs on our work site? Have we met that requirement?
- Are we current on first aid and CPR training?
- How will we address public safety in our tailboard and/or jobsite planning?
- In what ways can we prepare for the unexpected?
- If the vehicle becomes energized, we will be unable to access the AED. So, where else on the jobsite can we keep the AED so it will always be readily accessible?
- Are our vehicle first aid kits up to date? What about fire extinguishers?

Automated External Defibrillator (AED) Requirement

Safety Tier 1 HR Contractors working on or near energized high-voltage lines or equipment shall require each crew to have an automated external defibrillator (AED) onsite. Click **here** for the complete requirement.

Ask yourself: How can we keep our emergency response skills sharp?

Exhibit B

Primary Hazard Focus: Public Safety

TELL ME SOMETHIN' GOOD

"Thanks to you and your men for their prompt response to a fire we had today in our parking lot. It was reassuring to know that these two men responded to putting this fire out that could have burned many more trees or possibly the homes behind our property. These men quickly stopped without hesitation, using their fire extinguisher to put a stop to this fire before the fire department could arrive. Their courage and quick thinking is very much appreciated! They are definitely an asset to your company and so nice to see that there are still good people in this world. "

– thank you letter from a local business to a line crew for their assistance

As two traffic control technicians were driving through a city intersection, another vehicle ran a red light and struck the vehicle in front of them. The technicians realized there was a bleeding woman inside and smoke was coming from the vehicle, so **one of them parked the truck in front of the vehicle while the other turned on the lights and raised the arrow board.** Then, one technician directed traffic while the other removed the woman from the vehicle, at which time she let him know she had a baby in the car.

The technician removed the baby and handed him to his crew member, who placed the baby in the air-conditioned truck. The traffic control technicians stayed with the woman and baby boy until police arrived. The woman, who was not seriously injured, said she was so in shock that by the time she realized what had happened, she was already on the sidewalk and the baby was safe and cool in the truck. She kept saying the two technicians were angels.

Two crews were making up mid-span taps for a wire pull across a rural city road. Traffic control had traffic stopped in all four directions and was slowly flagging drivers through. **One of the linemen working in the air stopped work and yelled down to the ground crew that he could see a truck and trailer approaching the intersection with the eight-foot cargo door open.** When the men on the ground turned around, the truck was about to hit the trailer on the line truck. Instead, however, the cargo door swung back in and the vehicle began to slow down. Traffic had already been stopped by traffic control, so **several workers ran over, surprised the unaware truck driver, and closed the cargo door.** The driver exited the vehicle and thanked the workers.

While working a job in a mountainous area, an individual approached a line crew and stated that a car had driven off the side of the road. After searching up and down the road for any disturbances, the crew spotted a bystander who witnessed the car drive off the road. **The crew notified their safety professional about the situation, grabbed their first-aid kit, scaled down the 50-foot rocky, heavily wooded mountain, and located the final resting point of the third-party vehicle.** When the crew arrived, they found only one woman involved in the incident, already outside of her vehicle, with a sweatshirt wrapped around her head.

Using the first aid kit, the crew tended to her head wound as best they could. **The safety professional, who had arrived later, was at the top of the hill and communicated with the crew foreman via radio, flagged first responders, and directed them to the crew's location.** First responders parked on a road below the vehicle and, with the help of the crew, were able to get the injured woman down to paramedics.

Ask yourself:
In our locale, what is our relationship with first responders?

Exhibit B

TELL ME SOMETHIN' GOOD, *cont.*

A crew was working in a mountainous, remote area when a remote-control switch lit on fire, exploded, and started a brush fire**. The crew reacted immediately and drove down the road to put the fire out.** After they put out the fire, a crew member drove down the mountain for cell service and made proper notifications.

A worker was traveling on a highway through the outskirts of a remote area to report for duty. The worker noticed something not right ahead of him, and as he drove closer to further investigate, he realized he had just witnessed a multi-vehicle head-on collision. After 911 was called, **the worker rendered first aid to the man in his car** and, as he was trying to communicate with the man, the worker noticed SCE shirts.

After he was able to get some detail from the man in the car, the worker called a contact in the man's district and informed him of the incident. The district contact provided the worker with the man's name and **the worker stayed on-site until first responders arrived** to ensure the man was taken care of.

Civil crews were dispatched to perform concrete restoration in a residential area. Upon arrival, the two crews **secured their equipment for public safety** and safety of the crews. **Implementing all COVID-19 safe practices, the foreman made customer contact** to gain permission to work at the residence. Once permission and access were granted by the customer, the foremen held a tailboard with all crew members. Then, the crew installed a protective barrier not only to the existing wall, but to a swimming pool as well, protecting them both from splatter and from debris entering the customer's pool.

The crew completed the job and was commended by the resident on a job very well done. The customer mentioned the crew's professionalism, politeness, efficiency, and cleanliness. The customer also stated how the crew went above and beyond, leaving everything spotless to meet 100 percent customer satisfaction.

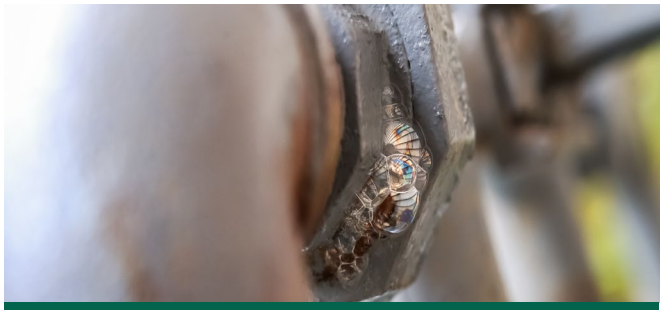

A crew was installing a service and meter to a new home when they noticed a gas smell. Using soap and water, **the crew identified the leak was coming from the gas line and notified the homeowner.** The homeowner contacted the gas company to make the proper connections and stop the leak.

A safety advisor noticed a member of the public had leaned an extension ladder against a service pole and climbed to the top, where he was grabbing the service drop from the transformer. **The safety advisor pulled over and asked the man what he was doing and why,** to which the man replied that, "he was a contracted electrician and was changing out a service panel." The safety advisor then asked the man if he had contacted Edison about swapping out the service panel, and both the electrician and property owner admitted they had not contacted Edison, had disconnected the service at the top of the pole on their own and did not have a permit. **As the safety advisor then contacted the district's SCE troubleman supervisor, the electrician climbed down the ladder and stopped working**.

After a brief discussion with the SCE supervisor, it was determined the supervisor would contact corporate security and send a troubleman to the site when available. The safety advisor also relayed some additional steps to be taken from the supervisor to the electrician and homeowner, including they are not to reconnect the service drop, and they are to go through their local SCE local planning. The safety advisor notified his supervisor and local code enforcement of the observation and steps taken by SCE.

Tell yourself:
If you find yourself becoming confused or anxious, stop what you are doing & take a deep breath.

Exhibit B

TELL ME SOMETHIN' GOOD, *cont.*

While driving to a remote job site, **a crew found a severely injured man on the side of the road.** He had driven off the mountain highway, crashed his vehicle and apparently pulled himself out to get help. The injured man had multiple large contusions and a puncture wound in his abdomen. **The crew applied first aid and called 911.** The injured man was taken by ambulance to the hospital.

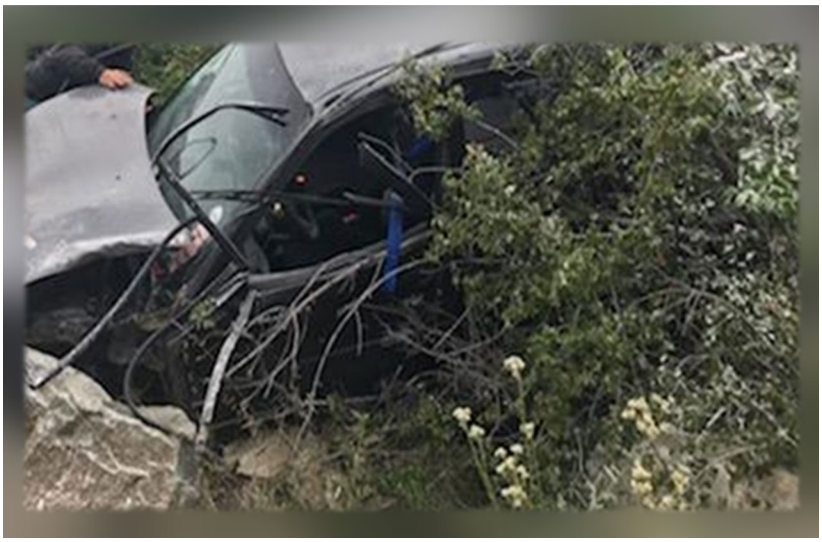

Actual incident images.

After leaving the yard in a company vehicle, a safety advisor was driving onto a freeway on-ramp and observed a vehicle swerve and roll over. The safety advisor **pulled to the side, turned on the vehicle beacon to slow traffic,** and noticed a young woman standing outside of the rolled-over vehicle. The young woman was bleeding and crying. As he approached her to see if she was alright, the safety advisor also noticed a stroller that had broken out the back window. When he asked the woman if anyone else was in the car, she began screaming, "My baby is in there!" So, the safety advisor went to the window with another bystander, **grabbed the baby out of her car seat, and handed her to her mother.** The woman and her baby were treated on-site and released.

While performing aerial inspections of poles, a drone crew (pilot and visual observer) found an elderly man that had fallen and been outside in the sun for approximately 90 minutes. **The crew helped the man back into his home**; his wife was returning home shortly. The man had sustained minor cuts and scrapes. He was in good spirits when he was found and was very glad someone came to his aid!

ADDITIONAL RESOURCES

Consider these reminders when it comes to emergency preparedness:

- In an emergency, remain calm
- Determine the nature of the emergency; assess the immediate threat
- Know that sudden changes can be emergencies *(e.g., chemical spills, fires, floods, broken water pipes, vehicle incidents, etc.)*
- Be alert for human-caused emergencies *(e.g., assaults, threats of violence at work or home)*
- If you, or others, are at risk of being harmed, leave the situation immediately
- If you can safely assist someone else in leaving a dangerous situation, do so. If returning to the emergency is risky, a trained rescue person may be better equipped to retrieve anyone in harm's way

Remember:
To be calm in a stressful situation, you must deliberately adjust your behavior.

Exhibit B

WIRED FOR SAFETY

August 4, 2021

Topics, trends, known hazards and best practices for use in tailboards to help keep yourselves safe, in all lines of work.

Primary Hazard Focus: Fire Safety

SAFETY OBSERVATIONS

Edison Field Safety observers found these opportunities for improvement April 2020 – present.

No. of Observations	Opportunities for Improvement
90	Required fire equipment is not on-site.

HISTORY TELLS US

Seven of the deadliest wildfires in California history were in the past 4 years. How can we do our part to help keep wildfires from igniting this season? According to the California Department of Forestry and Fire Protection, 95% of California wildfires are caused by people. If that's true, then it stands to reason 95% of California wildfires *are preventable*. That's where we come in…the goal is prevention.

Unfortunately, we now know from experience that wildfire season has moved from summer months to become a year-round issue, with wildfire fuels becoming more abundant as they dry throughout the year and drought conditions worsen. So, what is within our control to ensure our habits or the work we perform do not contribute to the problem? This means going beyond the mundane fire preparedness approach and, instead, making it top-of-mind during job prep and when on-site…consciously stepping through the fire plan, not just checking the box. How much real, conscious thought do we give to fire safety when planning and performing our work? Are we prepared for the high probability that fast moving, wind or fuel-driven wildfires will burn adjacent to or through the work area at any point?

And remember that wildfires can quickly overcome operational and maintenance crews, placing their health and safety at risk. How familiar are we with company programs and policies around fire prevention such as:

- SCE High Fire Risk Area (HFRA) Work Restriction and Mitigation Measures, which set restrictions or delays to field work in HFRA.
- SCE Hot Work Permit Program specifying requirements for spark-emitting activities such as cutting, welding and grinding operations
- Operations and Maintenance Plan for Electric Facilities on National Forest System Lands within the Pacific Southwest Region, which describes how a utility's field personnel and contractors conduct O&M activities in a manner that is consistent with the standards and guidelines of each Forest's land management plan.

Yes, that's a lot of information with which to be familiar, but much time and effort has gone into developing policies and procedures for wildfire preparedness and prevention — all with worker and customer safety in mind. So, again, how can we do our part to keep wildfires from igniting this season and not be included in that 95%?

Hold on a minute. Identify what's important right now – for you, your crew, this job…

- Will we be driving or parking over dry brush? What should we consider or do differently?
- Yes, we have fire extinguishers but are they up-to-date or expired? Who checked?
- Anyone on this crew a smoker? Are they properly extinguishing their cigarette(s)?
- Am I working near or with flammable materials? What precautions do I need to take?
- Will our work involve spark-producing equipment over or near vegetation/dry brush? If so, what is our fire plan?
- Does our work require a water truck? Anything else?
- Sure, you can see the fire equipment…but is it close by and accessible? If a fire ignites near you, just how far away do you want that gear to be? Pretty darn close, actually.

Talk about it:
We have a responsibility to do what we can to prevent wildfires from igniting.

Exhibit B

SOUTHERN CALIFORNIA EDISON
Energy for What's Ahead®

INCIDENTS & CLOSE CALLS | Selections from 2019-PRESENT

Year	Incident Summary
2021	• A **spark was caused when cutting down an energized phase** on a service, which resulted in a small spot fire. The fire was extinguished right away. • A worker left straw environmental protection wattles in the truck bed. The **wattles ignited on fire** and rapidly burned due to the heat and dryness. Another worker on-site used a bucket loader to dump a load of sand onto the bed of the truck and eliminate the fire. A safety representative was also on-site and assisted with the fire utilizing his fire protection tools. • A crew was in the process of refilling a press motor fuel tank when **heat caused the fuel fumes to ignite** a small amount of residual fuel. Fire mitigation was in place and the fire was extinguished immediately.
2020	• A crew was trimming a palm tree skirt to create space between the fronds and the secondary/triplex wire. The **wire sparked and the palm tree caught fire**. • A worker cleared a local pile of shrub/debris away from an access ramp. About an hour later **the pile reignited and flared up to a flame approximately three feet high**. The two crew members on-site quickly shoveled dirt and sprayed water, which extinguished the fire within two minutes. The crew then set up a Fire Watch to monitor the pile and other existing, still smoldering piles. • While performing a drone aerial inspection on a transmission asset, the operator's screen blacked out, the aircraft drifted into adjacent power lines and made contact with a line. The **drone's contact resulted in sparks/embers falling from the aircraft to the ground and igniting a small fire,** which the crew was able to extinguish with the fire equipment they had on-hand. • During the process of replacing a failed transformer, the foundation had to be disconnected and cut off from the slab. The cut-off process was taking place with a torch. Operations were asked to cease, stand down and move away from the work area by a safety representative. Several minutes after this took place, **smoke from a piece of metal slag was seen at the work area** and a worker utilized a water sprayer (water cannon) to put it out. • During a permanent casing installation process of a transmission tower, two sections of the casing were being welded together in the field. K-rail barriers and Vis-queen plastic were installed as best mitigation practices. When welding the two sections of the 40-foot casing together (one casing section 34 feet in the ground and the other casing section held above it by crane), **sparks from the welding/grinding activities traveled over the installed K-Rail barriers and Vis-queen plastic** and landed on dry vegetation five feet away and the dry vegetation began smoldering. The assigned crew Fire Watch identified all smoldering vegetation and quickly extinguished it using a fire extinguisher.
2019	• A crew was utilizing a chop saw with a metal blade to cut rebar for the installation of the wall footing. A **spark generated while cutting the rebar ignited a small brushfire** within the substation. • A crew was trimming trees near secondary wire when **wires sparked and ignited dry brush below the tree/wire.**

CRITICAL OBSERVABLE ACTIONS

Critical Observable Actions (COAs) are visible actions or conditions that mitigate a primary hazard. We've found the following COAs to be either the root cause or a causal factor of serious incidents when neglected. Check them out. Commit them to memory. Put them into practice.

Fire Safety

- Fire tools are set up and immediately available in the event of an emergency.
- All commercial weight vehicles contain at least two 2A:10B:C fire extinguishers. *(Be sure the extinguisher is fully charged, recently inspected, and in generally good condition)*
- Vehicles are set-up in a manner that allows for a quick evacuation and does not block any other vehicles/people. *(Park vehicles in the direction of escape, especially in tight work zones or where large crews are working.)*
- Gas powered tools being fueled in a dedicated area, free of vegetation. *(use a dedicated barrier placed on bare ground if possible; do not place gas can or hot tools on combustible material.)*

Think about it:
Who will be our designated Fire Watch?

Exhibit B

COVID-19 UPDATE

Reinstatement of COVID-19 Policies for Edison Suppliers

As delivered via email on July 30, 2021:

COVID-19 cases in society at large and at our company are increasing. As a result, Los Angeles County health officials released details on changed requirements for mask wearing indoors. In light of these changes and effective immediately, Edison has reinstated certain policies on outdoor mask wearing, physical distancing and vehicle practices to minimize COVID-19 exposure among our team members, especially those currently working in the field and other Edison facilities:

- Regardless of vaccination status, everyone working in an Edison facility is required to wear a mask.
- Regardless of vaccination status, masks are required when working outdoors and within 6 feet of others; no masks are required if working greater than 6 feet apart.
- Return to single-occupancy vehicle policy (one person per vehicle).
- No eating or drinking when in a vehicle with others (example: during breaks).
- When eating outdoors, maintain 6 feet distance.

For now, these policy changes apply to all Edison locations, where we work and serve customers. Other counties in our service area are experiencing similar COVID-19 case increases and have lower vaccination rates than L.A. County. We expect some other jurisdictions may follow L.A. County's lead and change their requirements.

Regardless of your vaccination status, there are exceptions where a facial covering is not required:

- When actively eating or drinking indoors and positioned more than six feet from others.
- When alone in a room or vehicle, with the door closed.
- When a certified medical accommodation allows you to avoid wearing a facial covering (though a supplemental worker may be required to wear an effective, non-restrictive alternative).[1]

Although this is a disappointing development, we are confident that adjusting our policies will help protect our extended team and those we work with and serve. Please continue to adhere to the existing daily wellness screening requirements, and encourage vaccination of employees, since we are still managing our response to the pandemic.

We will continue monitoring future changes and keep you updated as our policies are modified to protect everyone's health and safety.

Sincerely,

James W. Niemiec
Vice President, Operational Services
and Chief Procurement Officer

[1] If a supplemental worker has a religion-based objection to wearing a mask, you should conduct an interactive process with the worker to see if an effective reasonable accommodation is permissible.

HOW MUCH DO YOU KNOW?

Fire Safety Quiz

1. The Fire Supervisor is the designated Utility point of contact responsible for communicating fire related information between the Forest and the _____ work crews.
2. The fire patrol person is a member of the work crew assigned the responsibilities for fire _____ and fire _____ mitigation on the job site.
3. The Project Activity Level is a decision support tool designed to help fire and timber resource managers establish the level of industrial precaution for the _____ day.
4. The Fire Watch, when assigned, shall continue to monitor the Hot Work area _____ minutes after the completion of Hot Work operation to detect and extinguish smoldering fires.
5. When working with contractors, before starting a job that includes _____ _____, the SCE Representative or designated Point of Contact shall discuss the planned project, identify approved Hot Work site locations, review the _____-_____ emergency procedures with the contractor, and ensure the work procedures do not _____ with the objectives of the SCE Hot Work Program.

Answers: **1**. Utility **2**. prevention, risk **3**. following **4**. thirty **5**. Hot Work, site-specific, conflict

DEADLINES AND IMPORTANT DATES

September 17, 2021

Leader Safety Culture Training Requirement

By September 17, 2021, all Safety Tier 1 High Risk (HR) Contractors who have worked or plan to work at least 25,000 hours/year for SCE must upload into ISN their Leader Safety Culture Training documentation. Documentation is for all leaders overseeing employees conducting Safety Tier 1 work for SCE.

Click here for link to the guidance document at SCE.com

ADDITIONAL RESOURCES

On A Conditional Contractor Plan (CCP)?

Contractor Safety has made a minor modification to the Conditional Contractor Plan (CCP) form that incorporates additional sections for when a prime contractor is proposing to use a conditional subcontractor. This will allow the prime contractor to provide their rationale and oversight plan.

SOUTHERN CALIFORNIA EDISON
An EDISON INTERNATIONAL℠ Company

HFRA Hot Work Restriction & Mitigation Measures

The objective of this program is to (1) implement additional measures to help mitigate against crew/equipment caused fire ignitions in high fire risk areas (HFRA) and (2) to bring further heightened awareness to the inherent dangers around conducting field work that could generate a spark/arc or create an ignition (also known as "hot work activities") while working in HFRA.

This program requires SCE employees and contractors to adhere to additional precautionary safe work practices at all times when performing hot work activities in HFRA that may cause arcs, sparks, flames and/or significant heat sources which could lead to an ignition. Additionally, this program requires SCE employees and contractors to postpone non-emergency work that involves hot work activities during elevated and extreme fire weather threat conditions to help prevent a fire that could be difficult to suppress.

In the context of this field work restriction and mitigation program, hot work activities are defined as any activity that can initiate a fire or generate potential ignition sources. These activities include traditional hot work activities pursuant to SCE's Hot Work Program and various line work and switching activities. Some of these core activities are noted in the table below.

Hot Work Activities	
Hot Work Program	**Primary and Secondary Line Work and Switching**
Metal cutting and grinding, welding, burning, oxygen and arc cutting, open flame soldering, brazing, pipe thawing, torch applied roofing, thermal spraying	Manual operation of electrical devices, equipment or apparatus for the purpose of reconfiguring circuitry, energizing or de-energizing lines or equipment, opening or closing taps, clearing debris from energized lines, installing or removing protective covers on energized lines or equipment, working on energized secondaries or services Remote operation of overhead switches that require the presence of a field observer pursuant to SOB 322 when operating restrictions are in effect

Region managers (Distribution), regional construction managers (Distribution), district managers (Distribution), grid managers (Transmission), operations managers (Vegetation Management), field supervisors, and other OU leadership with oversight of field work (e.g., Generation, IT, CRE, etc.) are responsible for ensuring that SCE field personnel comply with this program and that their contractors are aware of their obligation to train their crews in the requirements of this program and validate that they have the requisite tools/equipment to comply with the mitigations listed below.

HFRA Hot Work Restriction and Mitigation Measures

SCE employees and contractors shall comply with **ALL** of the following fire mitigation practices whenever conducting hot work activities in SCE's HFRA:

1. Conduct a pre-job plan/tailboard to identify work activities that would have the potential for causing a fire and an action plan to mitigate them;
2. Work that could cause a fire shall be performed under the direct observation of the crew foreman or site lead;
3. Hot work permits (where applicable at SCE locations/facilities) are in place prior to commencing work;
4. One or more of the following mitigations must be in place:
    a. A minimum 10 ft. radius** of the ground around the central hot work activity area (or base of pole) shall be generously sprayed with water (or approved wetting agent) using water backpack or other means and reapplied as needed to ensure any vegetation or potential ignition risks remain damp throughout the duration of hot work, **OR**
    b. A minimum 10 ft. radius** of the ground around the central hot work activity area (or base of pole) shall be cleared to mineral earth (local agency/jurisdiction permitting), **OR**
    c. A welding tent, fire/blast/arc blankets, and/or metal shield surrounding the hot work must be deployed;
5. The crew is able to maintain adequate communications (900 MHz, cellular, satellite phone, etc.);
6. Work vehicle(s) must be equipped with, at minimum, the following fire suppression equipment: shovel, McLeod or heavy-duty metal rake, completely filled water backpack (minimum 5 gal. capacity), and ABC fire extinguisher (min. 5 lb. capacity). Such equipment must be readily available and placed within 10 ft. of the work being performed to enable an immediate response to an incipient ignition;
7. Care should always be taken not to park or drive vehicles on dry grass, leaves, or brush, **AND:**
8. All switching operations shall comply with System Operating Bulletin 322 (SOB 322).

**Protected area may be adjusted to account for wind or other environmental/site conditions as deemed necessary by foreman/site lead to ensure appropriate ignition mitigation.

Vegetation Management contractors shall also adhere to their approved SCE Contractor Hazard Assessment and Safety Plan Plans, which provide additional mitigation measures and requirements specific to their work scope and activities.

Additionally, all field work performed within the boundaries of the United States Forest Service (USFS) shall comply with the USFS Master Special Use Permit and Operations and Maintenance Plan Appendix "F" (Fire Plan), which outlines responsibilities for fire prevention and extinguishment of fires that inadvertently start from utility operations and maintenance (O&M) activities on forest lands. The provisions in the Fire Plan also specify conditions under which O&M activities are authorized to occur, identify a system for determining fire risk, and detail conditions under which O&M activities will be curtailed or shut down.

SCE employees and contractors shall comply with all applicable federal, state, and local fire safety regulations.

To determine if you are working in a HFRA, please see below.

Additional Field Work Restrictions During Elevated and Extreme Fire Weather Threat Conditions (PSPS Events):

During elevated or extreme fire weather threat conditions, SCE's incident commander may elect to activate an incident management team (IMT) to oversee its Public Safety Power Shutoff (PSPS) protocol. Special precautions must be taken during these events as vegetation will be particularly susceptible to ignition and a resulting fire could be difficult to suppress.

Hot work activity on or near circuits subject to PSPS: When working on or near circuits *under consideration for* or *de-energized due to* a PSPS event, all non-emergency work involving hot work activities on such circuits shall be cancelled during the period of concern and subsequently rescheduled when conditions improve. Emergency work (remediating conditions that represent immediate threats to public safety, electric reliability, or property) may only be performed if the above safe work practices (#1 - #8) are met. These restrictions shall apply to all SCE employees and contractors working in the areas of concern.

Note: If there are changes to the forecast and circuits are added to the PSPS monitoring list with a period of concern that is concurrent to hot work activities being performed, work must be safely stopped. Requested exceptions shall be provided to the PSPS IMT incident commander for review and approval along with the appropriate justifications and described mitigations. The crew foreman or site lead is responsible for ensuring adherence to these guidelines at all times, including situational awareness of HFRA boundaries and any current PSPS event activity.

To determine if you are working in HFRA or on a circuit impacted by a PSPS event, please see below.

***Exceptions* to the restrictions/mitigations noted above:**

- If the hot work is confined to an area devoid of flammable or combustible materials (e.g., parking lot, commercial area, irrigated/maintained agricultural lands, bare mineral rock/earth, work indoors, etc.), OR
- If it is actively raining, or has recently rained, and the ground and vegetation near the work area is saturated during hot work activities (reassessment required if rain ceases and fuels begin to dry out), OR
- Work that does not have the potential to generate arcs, sparks, flames or high-heat sources and cannot ignite a fire, OR
- When a circuit is de-energized due to PSPS and repairs to any identified priority notifications are needed, work may be performed to conduct such repairs so long as the remediation activities do not have the possibility of causing an ignition.

How to Identify HFRA and Circuits Subject to PSPS

In order to adhere to these guidelines, it is important that you maintain situational awareness about which areas are considered high fire risk and the circuits that serve and traverse those areas. The link below will take you to SCE's public "PSPS Impacted Areas" map tool where you can enter the nearest address in order to determine if you are in a HFRA or working (or planning to work) on a circuit under consideration for or

de-energized due to PSPS. You can toggle between the "PSPS Areas" and "High Fire Risk Areas" tabs as seen in the Figure 1 below.

Link: **www.sce.com/PSPS**

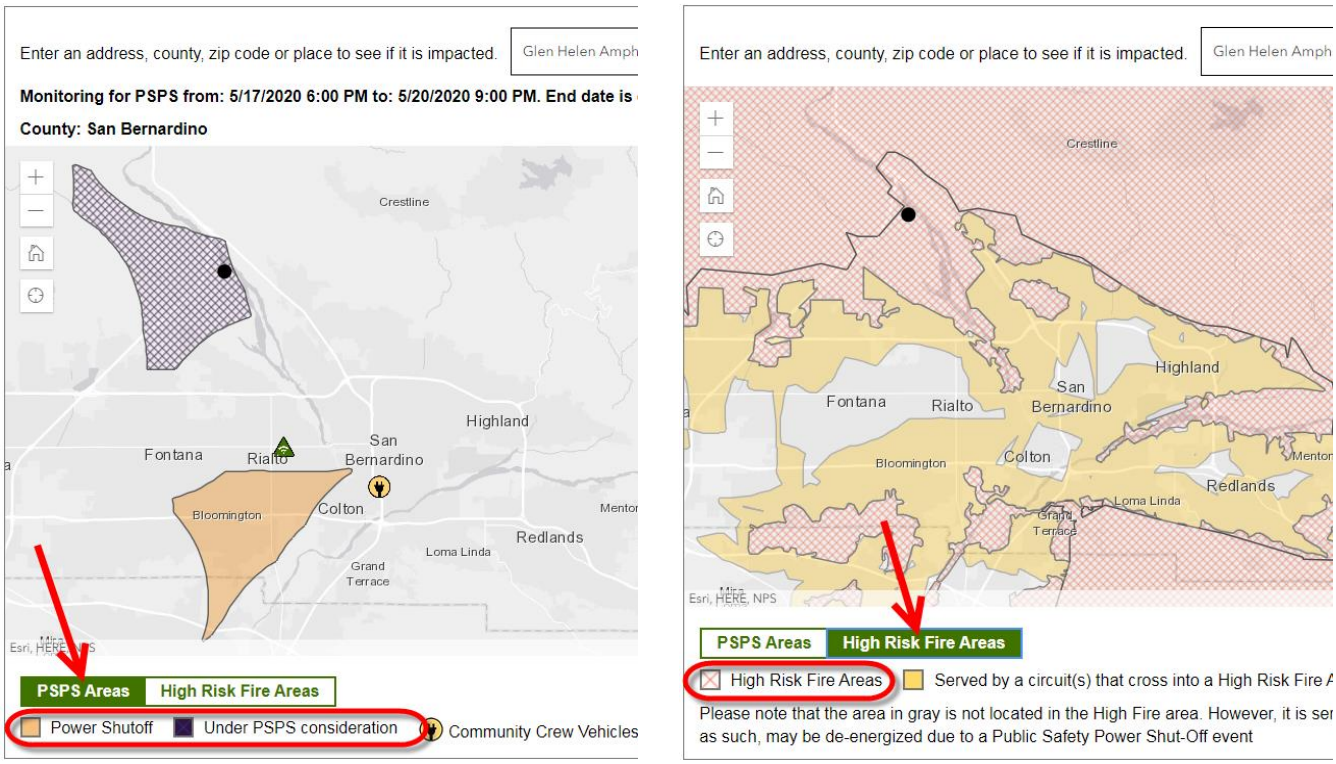

Figure 1

Fire Monitoring and Patrol

All SCE field operating organizations should always remain vigilant and alert for fires or possible fires while working or traveling in HFRA. Any identified fires must be immediately reported to 911 and the appropriate Switching Center or Control Center as soon as possible:

- Transmission and Distribution employees (including Vegetation Management) will notify the local switching center
- IT and Transmission Telecom employees will notify the Telecommunications Control Center
- Corporate Real Estate, Environmental Services, and Corporate Security employees will notify the Edison Security Operations Center
- Generation employees will notify Generation dispatch
- Contractors must also notify their Edison representative

Additionally, Red Flag Fire Patrol magnetic or vinyl signs should be displayed on designated vehicles when operating in SCE's HFRA during a Red Flag Warning (Magnetic = SAP #10212566 / Vinyl = SAP #10212567).

Recommended Fire Prevention Practices for Job Tailboards

Tailboards are a critical first step to ensure all supervisors and members of each crew involved in a job thoroughly understand the work to be performed and the method of accomplishing it in a safe manner. Before the start of each job, or in the event the scope of the job changes, every supervisor/job lead shall call his/her crew together and outline the proper work procedures/methods, roles and responsibilities, and possible hazards in order to conduct the work safely and minimize the risk of an ignition.

Below you will find a collection of best practices from CAL FIRE's Fire Prevention Field Guide, USFS Operations and Maintenance Plan for Electric Facilities, and other sources that can be used during the job tailboard when covering fire hazards and mitigations specific to the work being performed and job location.

- ✓ Select tools in good working order and work methods that minimize or eliminate arcs/sparks, if possible
- ✓ Select tools with mechanisms that do not create sparks or excessive heat when in use (e.g., hydraulic cable/bolt cutters) and avoid those that do (e.g., reciprocating saw)
- ✓ If arcs/sparks are unavoidable, ensure the work area is wetted down as required and utilize fire/welding blankets for added protection from heat sources
- ✓ Designate a Fire Watch, a person responsible for observing the hot work, monitoring conditions to ensure that a fire does not occur, stopping work if unsafe conditions develop, and immediately responding should an ignition occur
- ✓ Designate a Swamper, a person responsible for keeping the ground wetted under the hot work location as needed throughout the job
- ✓ Fire suppression tools and equipment should be kept directly accessible to workers at all times
- ✓ Carefully assess the terrain, vegetation, and access routes around and leading to the job location for hazards that may prevent the suppression of an incipient stage fire
- ✓ Ensure fire extinguishers are fully charged, water backpacks are full, and batteries are charged (if using battery powered sprayers)
- ✓ Ensure an adequate supply of water is available based on job size/type to ensure the area is wetted down appropriately throughout the day and water backpacks remain full
- ✓ Periodically inspect fire suppression equipment and tools to ensure they are in good repair and can be relied upon when needed
- ✓ Road grading or heavy brush removal requiring the use of heavy equipment should have a fire plan specific to the location and job objectives
- ✓ Mowing brush and small ingrowth trees to maintain previously cleared corridors should have a spotter in front of the mowing path to ensure rocks and other debris are removed prior to clearing
- ✓ If using gasoline-powered equipment, regularly check the spark arrestor to ensure carbon and/or oil buildup is removed and there are no holes in the arrestor screen
- ✓ When refueling equipment: Allow the equipment to cool for at least 5 minutes, only refuel over a non-combustible surface or approved fire barrier, SLOWLY open fuel tank to release pressure, and cease hot work during refueling; never rest hot equipment down on dry fuels
- ✓ Smoking is not permitted except in a barren area or in an area cleared to mineral soil at least 3 feet in diameter (PRC 4423.4)

WIRED FOR SAFETY

August 18, 2021

Topics, trends, known hazards and best practices for use in tailboards to help keep yourselves safe, in all lines of work.

Primary Hazard Focus: Switching

SAFETY OBSERVATIONS

Observations from January 2021-present

Top Opportunities for Improvement

7	Did not follow proper clearance processes

Check out page 3 to learn what happens with Safety Observation findings

HISTORY TELLS US

When it comes to switching, get with the program. Most people don't realize that we all switch at some point during the day — that is, turning a light switch on or off is one of the simplest forms of switching...but that doesn't mean that switching is simple! On the contrary, switching takes on a whole new meaning when it comes to performing tasks on a complex, high-voltage power system, following a methodical program of steps combined with safe work practices to keep everyone involved injury-free throughout the process.

Whether switching to energize or de-energize overhead, underground or substation circuits and equipment, a single switching operation can affect so much — the individual(s) directly performing the task, a short section or miles of conductor and equipment, one crew, multiple crews, one customer, or thousands. That's a lot of responsibility. It's also exactly why every step in a switching procedure and task within clearance boundaries demands laser focus, a clear understanding of procedures, clearance boundaries, effective three-way communication, and everyone doing their part, properly.

Installing jumpers, energizing, de-energizing, troubleshooting circuits and equipment, switching in a substation or in the field, and performing routine or emergency, complex or relatively simple and straight forward switching all require the same forethought before turning/throwing a handle or operating any device: what effect will my action have on this circuit or equipment?

And for those who may think there's not much to learn here because their work does not involve switching...think again. Considerations during switching can also apply to other work-types — considerations such as rigging, effective three-way communication, proper body mechanics, program (plan) review, checking each other, mapping and verification, whether connecting or disconnecting, potential equipment failure, having line of sight to what you are working on, and being the traffic controller (system operator) or eyes and ears in the field (performing the switching). Let's not forget perhaps the most critical consideration is being focused on the task in front of you.

So, particularly in switching but no matter your line of work, double check, triple check, or more. Do whatever it takes to be 100% sure that your action will result in the intended outcome and, if not, what must be done differently?

Communication is not the same as EFFECTIVE communication.

- Did I follow proper lockout-tagout (LOTO) procedures?
- Have all the conditions required been met and verified to maintain the circuit/equipment in the intended condition (clearances, unloaded, paralleled, grounded)?
- Are conditions satisfied for appropriate testing and grounding?
- Did I verify the remote end(s) of my clearance points are in the required position?
- Are conditions satisfied for appropriate testing and grounding?
- Is the equipment designed and in suitable condition for the intended switching task?
- Are there any gaps in our coordination between the source (generation, substation, main line, transformer) and the field?
- Should I expect "spit" (arcing) or no spit?
- Are we energizing new equipment and circuits for the first time? How does that influence our approach?
- Did we review all circuit maps, station prints, or other critical documentation?
- Will this switching step parallel, separate, or not change circuit and/or equipment status?

Ask yourself: How does a power-flow check keep me on task?

Exhibit B

SOUTHERN CALIFORNIA EDISON
Energy for What's Ahead®

INCIDENTS & CLOSE CALLS | Selections from 2020 - PRESENT

Year	Incident Summary
2021	• A worker **inadvertently tested into a fault.** • When closing 12 kV disconnects, a worker **jolted their shoulder during the switching** and felt discomfort the next day. • A crew was tasked with changing out a single-phase pad-mount transformer to a new looped-through transformer. Using binoculars, the crew **misidentified the line and load-side phases, and the crew went phase-to-phase** while landing load-break elbows. This caused the upstream fuses in the PME (dead-front fuse cabinet) to blow. No flash or injuries. • In order to close a sub-transmission switch on a wood pole, a worker used the temporary pole steps to climb approximately seven pole steps, about six feet off the ground. He positioned himself to throw the switch and as he thrusted up into a full-body extension, the temporary pole step and lag on the street side (supporting his left foot) pulled out at an angle. **The worker's foot slipped down and off the temporary pole step, which caused him to lose his balance and fall** into a backward rotation — out of his belt — and clearing both his feet. The worker's hard hat fell off as he rotated backwards, and he hit the concrete sidewalk, headfirst. • A crew was working a planned outage and checked everything with map, tags, and amp checks. They operated the correct switch position on a PME, but **only one transformer was de-energized, and it was not the one they expected.** • There was a phase-to-phase flash when a worker **opened cutout on a capacitor bank that had the Kyle switches open.** • A **flash occurred** when a worker was in the process of **closing a 4 kV disconnect** to make a parallel between two circuits. • A worker **performed unauthorized switching**, which created a system parallel. • A crew was assisting with substation cable testing by connecting additional load and **inadvertently identified the wrong position with bad cable.** There were no cable tags and because the circuit was de-energized, the crew was also unable to amp check for verification.
2020	• While switching from a pre-approved program, a 12 kV parallel was made on a pole switch. When opening the circuit breaker to break the parallel, **load was dropped because the pole switch did not fully operate**. • There were multiple crews working on the same line, and one worker held a clearance for all work. He completed the work at his location, released his clearance to the switching center, then a few minutes later called back to delay the release. He said grounds from another crew were still on the line. **No switching had begun, an All Stop was called,** crew members re-tailboarded, grounds were removed, and the switching center was called back. No further incident. • A worker **felt pain in right arm while switching**. • A worker was attempting to test the functionality of a remote-control switch (RCS) on a 12 kV line. The worker made a parallel with an adjacent circuit and then **opened the wrong position on the RCS**. Instead of breaking parallel, the worker de-energized the 12 kV to the end of the line. Realizing the mistake, the worker closed the position back in, picking up all load. • **Customer load was inadvertently dropped** while crew was attempting to break a parallel, following an approved switching program. • A crew **operated the incorrect position on a switch**, which caused more load to be de-energized than anticipated. No flash occurred and there were no injuries. There seemed to be some discrepancy between the cable tags and the circuit map. • A crew opened a loop-switch on a pad-mount switch to de-energize a capacitor bank. When they opened the switch, **load was unintentionally dropped**. It was discovered that the loop was the coil, and the coil was the loop. The pad-mount came labeled wrong from the manufacturer. Load was restored, and the pad-mount was tagged and written up to be replaced. No injuries. • While switching at a substation, a worker was opening a set of line ground disconnects. The disconnects were under tension, so the worker was not prepared for the handle to fall so rapidly. The **worker lost control of handle and it struck the worker in the chest**.

WIRED FOR SAFETY

August 18, 2021

Topics, trends, known hazards and best practices for use in tailboards to help keep yourselves safe, in all lines of work.

Primary Hazard Focus: Switching

CRITICAL OBSERVABLE ACTIONS

Critical Observable Actions (COAs) are visible actions or conditions that mitigate a primary hazard. We've found the following COAs to be either the root cause or a causal factor of serious incidents when neglected. Help us help you. Review them. Commit them to memory. Follow them.

Select COAs from Transmission, Substation. and Distribution are below.

- The crew is working at a safe pace
- The crew is communicating effectively
- The crew is avoiding pinch points and bights
- The crew is working free of distractions (i.e., mobile phones, etc.)
- The crew is using three-way communication for critical tasks
- Individual workers are using Self-Check during critical tasks
- The crew is using Peer-Check during critical tasks
- The crew has grounded effectively per contractor grounding plan
- The crew has effective lockout-tagout in place (i.e., clearance)
- The open points are tagged
- The crew has defended against backfeed and induction (i.e., open points, grounding)
- Work area is properly identified
- Safe work distances are maintained (minimum approach distance)
- Work position and equipment are properly grounded
- Checker is present
- Visual blocking devices are present
- Crew is wearing appropriate FR clothing and PPE for the task to be performed

DEADLINES AND IMPORTANT DATES

September 17, 2021

Leader Safety Culture Training Requirement

By September 17, 2021, all Safety Tier 1 High Risk (HR) Contractors who have worked or plan to work at least 25,000 hours/year for SCE must upload into ISN their Leader Safety Culture Training documentation. Documentation is for all leaders overseeing employees conducting Safety Tier 1 work for SCE. Click here for link to the guidance document at SCE.com

ADDITIONAL RESOURCES

On A Conditional Contractor Plan (CCP)?

Contractor Safety has made a minor modification to the Conditional Contractor Plan (CCP) form that incorporates additional sections for when a prime contractor is proposing to use a conditional subcontractor. This will allow the prime contractor to provide their rationale and oversight plan.

How will the new Safety Classification and Learning (SCL) model affect 60-day incident reports?

SCE has implemented a change to how serious injuries and incidents are classified. As of this month, the new SCL model replaces the Life Threatening/Life Altering (LT/LA) classifications previously used by SCE. Here's a 10-minute overview of the model and how it affects the way you will complete the 60-day incident reports. To illustrate the specifics of the different SCL model classifications, a 7-minute "Examples" video is also available, which features real incidents from both our contract and internal workforce.

Where Do Safety Observation Findings Go?

As with all the work we do, communication is also key when it comes to safety observations.

1. Safety observations are communicated to:
   - Foreman
   - Contractor safety representative
   - Contractor management
   - SCE Edison representative
2. Significant observations are communicated immediately (on-site and with supervision) and managed with urgency.
3. Trending opportunities for improvement are elevated.
4. Safety observation findings are managed in collaboration with the SCE and Contractor representatives.

Think about it: How can I apply the considerations for excellence in switching to my line of work?

Exhibit B

SOUTHERN CALIFORNIA EDISON
Energy for What's Ahead®

WIRED FOR SAFETY

September 1, 2021

Topics, trends, known hazards and best practices for use in tailboards to help keep yourselves safe, in all lines of work.

Primary Hazard Focus: Situational Awareness

SAFETY OBSERVATIONS

2021 Observations through August

Top Opportunities For Improvement	
11	Observer not engaged
5	Unmarked drop zone
3	No three-way communication
3	In the line of fire

HISTORY TELLS US

Situational awareness is a fancy term for being aware enough of our surroundings to identify potential threats and dangerous situations, and we do that all the time. We often tell ourselves and our family members to pay attention when walking to our cars at night, driving through unfamiliar parts of town, navigating through venues, and getting cash out of an ATM — because you never know what can happen. But what about when there is no clear or present danger? How acutely aware do we need to be then? Well, if we are interested in preventing incidents, it pays off to regularly scan our environment.

Consider the information discussed in the tailboard — like who's doing what and how/where they'll do it. We can take that information with us as we move through the jobsite, and all the while remember that jobs are dynamic and may experience changes in work scope, a procedure, or an approach. So, when we regularly assess what's changing/has changed, or what wasn't a hazard when the job started but is now or could develop into one, we stay aware of potential threats and dangerous situations. The next layer is how and when are changes communicated. Is it a no or low-impact change that can be validated through three-way communication, should we have an informal conversation before implementing the change, or does it merit a new tailboard? This also applies to visualizing the work ahead — how does what we are doing now impact what we'll do down the line? And it's not just about regularly assessing our surroundings to *stay ahead* of potential threats — we might become aware of and be able to assist with something happening real-time.

So, it might take some doing to be focused on our own tasks yet be mindful of what's going on around us but, again, it's really a matter of engaging the mindset we already use elsewhere. For those who need help jumpstarting their situational awareness, check in on a crew member when you're working in high heat or review the Emergency Action Plan for your specific job that day (and don't just rely on what it was for the "last job"). Then, there's always asking those "what if" or "what happens when" questions before loosening or tightening hardware, moving equipment, bringing tools into the minimum approach distance (MAD), managing a controlled load with a tag line, working near a drop zone, or working in proximity to energized equipment or circuits.

Remember, personal safety isn't just following policies and procedures…it starts with assessing our environment and — within that context — how we apply those policies and procedures while being aware enough to adjust if we need to.

We may not be able to foresee every eventuality, but no one wants to be sucker-punched by something they could have seen coming…if they'd only paid attention.

We can't predict the future, but we can look ahead and decide how to best approach it.

- Does everyone know where emergency supplies are located?
- Who else might be affected by this change in circumstance, status, or condition? Who will make them aware?
- How can I be focused on my work but maintain peripheral vision?
- Did we identify an escape route?
- Does everyone know emergency procedures to follow in various emergency scenarios (fire, flash, fall, confined space, earthquake)?
- There are lots of moving parts to this job — how should we assign responsibilities to keep an eye on certain areas?
- What work is going on above me? Next to me? Behind me?
- Did I communicate this immediate task requires all my attention, so they know I am hyper-focused?
- What wasn't a hazard but is a hazard now or could develop into one?
- When was the last time I scanned my work area or the overall jobsite for changes or other issues?
- Before I do this, did I ask, "What if?" so I can plan ahead? Maybe play out potential scenarios before a critical task?
- Have a gut instinct that something isn't right? Stop and talk about it.

Ask yourself: Ever been a time you wished you would have been paying attention? How would it have affected the situation's outcome?

Exhibit B

SOUTHERN CALIFORNIA EDISON
Energy for What's Ahead®

Primary Hazard Focus: Situational Awareness

A SELECTION OF INCIDENTS & CLOSE CALLS | 2020 - PRESENT

Year	Incident Summary
2021	• A worker was walking from one crew to another in an area where road conditions transitioned from very dry to damp, with patches of ice due to shade by several trees. The worker **inadvertently stepped onto a small area of black ice and fell to the ground**. He suffered discomfort in his lower right ankle. • A crew was using two line trucks to replace a pole, and a worker **used the remote controls for the wrong truck,** which caused sudden movement of a hot arm and resulted in a circuit interruption. • A worker was assisting with framing a pole on the ground and when he moved to reposition himself, he **tripped over a crate behind him and fell backward**. The worker tried to brace himself with his arm, which resulted in straining his left wrist. • A worker **didn't see the change in elevation,** tripped, and hyper-extended their knee. • When a worker was installing bearing braces using a three-pound hammer, twice he **missed his target and struck himself** in the left wrist and back of his hand. • A worker **lost awareness of the elevated sidewalk**, tripped over the curb, and landed on their side, wrist, and head. • A worker was **accidently struck on the head** by a closing toolbox lid. • While a worker was installing a second set of grounds, he was asked to perform a second task, which **led him to work outside of his equal-potential bracket grounds**. No injuries or equipment damage. • A worker was using a clay spade pneumatic tool to install a ground rod in an open trench, when he **noticed smoke coming out of the manhole** 25 feet away. It was discovered the ground rod had been driven through an encasement and struck a 12 kV cable. • A worker stopped welding overhead and brought the rod holder (with the welding rod still in it) down to chest-level and held it there in his right hand. He flipped the welding hood up to visually inspect the weld, but his safety glasses were fogged up. So, the worker removed the safety glasses with his left hand; his right hand was still holding the welding rod/holder at chest-level. The worker wiped his head on his left shoulder, then swung his head down and to the right, which **caused his left eye to make contact with the hot end of the welding rod.**
2020	• When worker 1 was exiting the crew cab of the foreman's pickup, he **didn't see worker 2's hand there, and accidently closed the door on it.** This pinched a few fingers on worker 2's hand, but he said he was okay and refused medical attention or urgent care. A safety representative was notified, and the worker followed up on his own for self-care directions. • While maneuvering a bucket into a working position to close primary taps, the **secondary conductor was inadvertently pushed into the primary conductor, mid-span**. No injuries. Proper notifications were made. • While pumping water out of an underground structure, a worker **tripped over the hose, fell, and landed on their shoulder.** • While worker 1 was finishing cable make-up in a splice box, worker 2 (outside of the splice box) **accidentally kicked a dome light** into the splice box, which **struck worker 1 in the head**. • During routine compliance tree trimming, a worker was holding a small branch with his left hand and using his right hand to cut the branch with a handsaw. The worker completed the cut in a backward motion toward his body, and the momentum of the motion **allowed the blade to continue through the branch and make contact with his left finger.** There was little-to-no bleeding from the cut; the ground crew sent up a first-aid kit and the worker applied a bandage, finished trimming the small tree, then came down. Another crew member transported the injured worker to a local hospital where he received five stitches for the 3/4-inch laceration. Proper notifications were made. • While maneuvering a pole to be set, the pole broke free and a **worker's left hand was pinched between the pole and line truck.** The worker sustained a broken left pinky finger. • When pruning a property-line tree, a worker's hard hat and shoulder **made direct contact with a weather-proof secondary line**. No injuries.

A SELECTION OF INCIDENTS & CLOSE CALLS | 2020 – PRESENT, cont.

Year	Incident Summary
2020, *cont.*	• At night, a crew was framing a pole near a ten-foot-deep hole that had been dug previously for the new pole set. A worker **miscalculated his surroundings and stepped backwards, slid down to the bottom of the exposed hole**, and landed on his feet. The worker was safely helped out of the hole and declined further follow-up. The crew re-tailboarded, calling attention to being alert to their surroundings, paying close attention to the task at-hand, working safely, and the importance of not being in a hurry. Work was completed without further incident. • A crew member was spotting for the backhoe operator while clearing debris from a vault excavation. The crew member was standing right beside the outrigger of the backhoe as it was removing an oversized piece of debris from the excavation, when the weight of the debris being lifted shifted in the bucket of the backhoe and caused the outrigger to lift off the ground and move. When the **outrigger came back down, it pinched the crew member's big toe** on his right foot. • **Bucket controls were inadvertently actuated** while transferring communication lines and caused the bucket to push on the pole. This resulted in strain on the conductors, which broke the pole across the street. • When rolling up guy wire, the worker **lost control of the wire's end and it sprung back into his face,** which resulted in some cracked and fractured front teeth.

DEADLINES AND IMPORTANT DATES

September 17, 2021
Leader Safety Culture Training Requirement

By September 17, 2021, all Safety Tier 1 High Risk (HR) Contractors who have worked or plan to work at least 25,000 hours/year for SCE must upload into ISN their Leader Safety Culture Training documentation. Documentation is for all leaders overseeing employees conducting Safety Tier 1 work for SCE. Click here for link to the guidance document at SCE.com

ADDITIONAL RESOURCES

On A Conditional Contractor Plan (CCP)?

Contractor Safety has made a minor modification to the Conditional Contractor Plan (CCP) form that incorporates additional sections for when a prime contractor is proposing to use a conditional subcontractor. This will allow the prime contractor to provide their rationale and oversight plan.

How will the new Safety Classification and Learning (SCL) model affect 60-day incident reports?

SCE has implemented a change to how serious injuries and incidents are classified. As of this month, the new SCL model replaces the Life Threatening/Life Altering (LT/LA) classifications previously used by SCE. Here's a 10-minute overview of the model and how it affects the way you will complete the 60-day incident reports. To illustrate the specifics of the different SCL model classifications, a 7-minute "Examples" video is also available, which features real incidents from both our contract and internal workforce.

FOR YOUR REFERENCE | Excerpt: SCE Accident Prevention Manual (APM)

APM Rule P-14

Here's what SCE's Accident Prevention Manual (APM) says about what to do when an accident occurs.

P-14. What To Do When An Accident Occurs
The following procedures covering the reporting and preliminary evaluation of all accidents shall be strictly observed:

a. Injury to Employees

1. If possible, at least one employee should stay with the injured person, rendering first aid they are qualified to perform until Emergency Medical Services arrives. If only one employee is available, they must summon emergency medical services as quickly as possible even if that means leaving the victim momentarily.
2. In the event of an emergency requiring EMS, supervisors or responding employees must call for medical assistance using available communication devices (phone, mobile phone, radio, etc.). The caller should dial 911 or follow any site-specific instructions regarding when and how to call the 911 emergency operator. The caller should be prepared to give the following information:

   (a). Name, nature of emergency.
   (b). Address, nearest cross street, and city.
   (c). Phone number you are calling from.
   (d). The caller should stay on the line until information is confirmed.

   Employees should follow any site-specific instructions regarding when and how to call the 911 emergency operators.
3. Supervisors, or responding employees, shall report the emergency per site specific or field emergency procedures. For SCE Office buildings this point of contact would be the Edison Security Operations Center. For field operations they should follow relevant OU field procedures.
4. Supervisors, or responding employees, shall report injuries that require EMS to the Watch Office: PAX 44286 or (626) 812-4286. The Watch Office will notify Corporate Safety, Claims/Law, Workers' Compensation and appropriate Business Unit Management.
5. Employees shall report all industrial injuries and illnesses to the work location supervisor as soon as possible.

HOW MUCH DO YOU KNOW?

1. If a bystander had an AED and placed it on the patient, whether or not it ultimately delivered a shock, survival increased to 23%, and if an AED was placed and a shock given, the survival rate was _____ . For patients who received bystander CPR followed by defibrillation by the EMS services, survival was 15%.
2. The Occupational Health and Safety Administration (OSHA) identifies a workplace emergency primarily as "an _____ situation that threatens your employees, customers or the public."
3. Using electronic devices can seriously impair your ability to be aware of what is going on around you. Look up occasionally to ____-_____ your surroundings and make note of any changes.
4. Most people automatically _____ new situations or environments, but don't always focus on the most _____ information.
5. _____ safety begins with an individual's _____ to their environment — no one can defend against danger they couldn't see coming.

Answers: 1. 36% **2.** unforeseen **3.** re-scan **4.** scan, useful **5.** Personal, awareness

Think about it: What does your company policy say about emergency response?

Exhibit B

ET&D OSHA Strategic Partnership Communication

ET&D Strategic Partnership Communication Letter July 2021

Industry Serious Injuries and Fatalities August 2021

An open letter to America's Electric Power Industry Workforce July 2021

Dear Colleagues,

We are committed to protecting the safety and health of all individuals employed in the electric power industry. This commitment is driven by strong support from industry leaders and the ongoing collaboration among industry partners to monitor, benchmark, and improve worker safety best practices.

Recently, we have seen an increase in serious injuries and fatalities (SIF) in our industry, including six fatalities and seven near fatalities in June. Reports of additional incidents are currently being reviewed.

The OSHA Electrical Transmission and Distribution (ET&D) Partnership—a formal collaboration of industry stakeholders working together to improve safety for workers in the electric transmission and distribution industry—is focused on addressing the causes for this increase and is reaching out to the industry workforce to ask for your assistance.

Electrical contacts were involved in the greatest number of these recent SIF incidents, which also included a "struck- by" incident, a trench collapse, an arc flash, and a work zone incident. We can prevent SIF events by working together, focusing on safety, and following industry best practices. We are redoubling our ongoing efforts to promote and support activities to prevent SIF and to achieve and maintain safety excellence.

Through field safety engagements, and other actions taken by leadership, you and your colleagues have opportunities to share your concerns and recommendations to improve safety performance. Each company's expectations and goals communicated to employees and reinforced by leadership will help to continue to ensure engagement with safety rules at all levels of operations.

As always, we are asking you to maintain a safety focus and to share information on hazards, near-miss events, and ways to improve work processes. Attention must be given to electrical hazards and the skills and techniques necessary to protect yourself from or avoid these hazards.

Exhibit C

We also encourage, before beginning work, that you consult with your supervisor if you are unsure of how to safely perform any task associated with the job. Everyone is asked to review the proper use, installation, and verification of insulating/shielding materials and insulated tools for working on or near exposed energized parts of electric equipment.

ET&D Best Practices and refresher training is posted on the www.powerlinesafety.org website and in the ET&D Partnership App. We encourage you to download the app, become familiar with the content, and keep these valuable resources available for review. Following these practices or your company's safety requirements will help to ensure everyone's safety.

Please take the time now to refocus, to review safety practices, and to recommit to incident prevention. OSHA's Safe + Sound Week, a nationwide event that recognizes the successes of workplace health and safety programs and encourages the sharing of information and ideas to keep America's workers safe, is coming up August 9-15. During that time, we will hold an industry safety stand down. More information will be shared through the ET&D Partnership App and through our website.

Thank you for the work that you do, and we hope that we can count on your commitment and support.

Sincerely,

Western Line Constructors Chapter, Inc | 2540 E Bengal Blvd., Suite 200, Cottonwood Heights, UT 84121

Exhibit C

An open letter to America's Electric Power Industry Workforce

July 2021

Dear Colleagues,

We are committed to protecting the safety and health of all individuals employed in the electric power industry. This commitment is driven by strong support from industry leaders and the ongoing collaboration among industry partners to monitor, benchmark, and improve worker safety best practices.

Recently, we have seen an increase in serious injuries and fatalities (SIF) in our industry, including six fatalities and seven near fatalities in June. Reports of additional incidents are currently being reviewed.

The OSHA Electrical Transmission and Distribution (ET&D) Partnership—a formal collaboration of industry stakeholders working together to improve safety for workers in the electric transmission and distribution industry—is focused on addressing the causes for this increase and is reaching out to the industry workforce to ask for your assistance.

Electrical contacts were involved in the greatest number of these recent SIF incidents, which also included a "struck- by" incident, a trench collapse, an arc flash, and a work zone incident. We can prevent SIF events by working together, focusing on safety, and following industry best practices. We are redoubling our ongoing efforts to promote and support activities to prevent SIF and to achieve and maintain safety excellence.

Through field safety engagements, and other actions taken by leadership, you and your colleagues have opportunities to share your concerns and recommendations to improve safety performance. Each company's expectations and goals communicated to employees and reinforced by leadership will help to continue to ensure engagement with safety rules at all levels of operations.

As always, we are asking you to maintain a safety focus and to share information on hazards, near-miss events, and ways to improve work processes. Attention must be given to electrical hazards and the skills and techniques necessary to protect yourself from or avoid these hazards.

We also encourage, before beginning work, that you consult with your supervisor if you are unsure of how to safely perform any task associated with the job. Everyone is asked to review the proper use, installation, and verification of insulating/shielding materials and insulated tools for working on or near exposed energized parts of electric equipment.

ET&D Best Practices and refresher training is posted on the www.powerlinesafety.org website and in the ET&D Partnership App. We encourage you to download the app, become familiar with the content, and keep these valuable resources available for review. Following these practices or your company's safety requirements will help to ensure everyone's safety.

Exhibit C

Please take the time **now** to refocus, to review safety practices, and to recommit to incident prevention. OSHA's Safe + Sound Week, a nationwide event that recognizes the successes of workplace health and safety programs and encourages the sharing of information and ideas to keep America's workers safe, is coming up August 9-15. During that time, we will hold an industry safety stand down. More information will be shared through the ET&D Partnership App and through our website.

Thank you for the work that you do, and we hope that we can count on your commitment and support.

Sincerely,

ELECTRICAL TRANSMISSION & DISTRIBUTION PARTNERSHIP
POWERING SAFETY TO NEW HEIGHTS

Aldridge Electric, Inc.
www.alridgegroup.com

Asplundh Tree Expert, LLC
www.asplundh.com

Edison Electric Institute
www.eei.org

Davis H. Elliot Company, Inc.
www.dhec.com

The Goldfield Corporation
www.goldfieldcorp.com

Henkels & McCoy Group, Inc.
www.henkelsgroup.com

Int'l. Brotherhood of Electrical Workers
www.IBEW.org

MasTec, Inc.
www.mastec.com

MDU Construction Services Group, Inc.
www.mducsg.com

Michels Corporation
www.michels.us

MYR Group, Inc.
www.myrgroup.com

National Electrical Contractors Association
www.NECAnet.org

Occupational Safety & Health Administration
www.OSHA.gov

Pike Electric, LLC
www.pike.com

PLH Group, Inc.
www.plhgroupinc.com

Quanta Services, Inc.
www.quantaservices.com

Riggs Distler, Inc.
www.riggsdistler.com

Exhibit C

ET&D OSHA Strategic Partnership Nationwide Safety Stand Down

- Industry Serious Injuries and Fatalities
- Late May to Mid July 2021

Exhibit C

Background

- In mid June, an industry wide increase in serious incidents was noticed.
- As more data became available, it was obvious that the rate of serious injuries and fatalities (SIFs) in our industry was on a sharp rise.
- With the assistance of OSHA, the ET&D Partnership Steering Committee began tracking industry SIF incidents.
- Through this tracking activity, the Partnership is able to confirm at least 10 industry fatalities from late May to Mid July, with 6 in the last 2 weeks of June. Detailed information is not known on many of these incidents, but we did not want to delay sharing information on this increase in incidents while we wait for those details.

Note

- As we present data in these slides, it is imperative to point out that each one of these incidents involved colleagues with spouses, children, parents, siblings, best friends, crew members, whose lives were terribly affected by these tragedies.
- Just like you, these colleagues of ours had plans for that evening, that weekend, this summer, next year and beyond.
- When you see the phrase “fatality” in the coming slides, we are not, in any way, trying to change that loss of life to a statistic. We are sharing this information in hope of preventing future injuries and deaths.
- Each one of these colleagues left a tremendous void in the lives of their families and friends. The partnership would like to express their heartfelt sympathies to the families of all affected by these incidents.

10 Fatalities: Late May to Mid July

- An employee in our industry was the victim of a fatal rollover that involved a mini-excavator.
- A public vehicle struck an arrow board which then struck the employee who suffered fatal injuries.
- An apprentice lineworker contacted primary suffering fatal injuries.
- A pick-up truck rollover resulted in a fatality. The employee was found several feet from the truck when it finally stopped.

10 Fatalities:
Late May to Mid July

- Three separate incidents occurred in this time period during which lineworkers suffered fatal injuries involving electric contact however details are not known.
- An employee was fatally injured in an incident which accidental energization is being investigated.
- A lineworker was found unresponsive during storm restoration. It is believed that electric contact is the cause of this fatal incident.
- One member of an Underground crew suffered fatal injuries, and another was burned but survived.

13 Serious Incidents (Non-Fatal Injuries)

- A lineworker experienced an electric contact when a metal part of the bucket contacted a live primary resulting in burns to hands.
- An employee was connecting neutral line near energized primary phases and contacted the energized phase resulting in burns to face and arm.
- A foreman touched pole being set. It is believed he was not wearing rubber gloves, sleeves, or di-electric overshoes at the time. The crew administered CPR and the employee survived.

Serious Incidents continued

- An employee contacted a live primary while working near a substation. Multiple crews were working the site and the line the employee was working on was thought to be de-energized.
- A flash occurred in an underground trench. The investigation of the incident has included a review of the practice of driving a screwdriver into the sidewall of the trench.
- Two workers installing powerlines were shocked. Police said both should survive, but one of them was so seriously shocked that his heart stopped multiple times on the scene.

Serious Incidents continued

- While attempting to install box timber shoring underneath existing utilities, a part of the box tunnel collapsed on an employee. The employee was engulfed by dirt up to his knees and required the assistance of a second employee and Vac truck to be dug out. Although no major injuries are known at this time, it is important to include this incident as a reminder of how quickly things can go wrong.
- A digger boom inadvertently contacted primary resulting in burns to employee on the ground.
- Four additional burns from electric contact were reported with details not known or not confirmed.

Contractor Safety Services

INCIDENT ALERT

Activity: Trenching & Excavation Operations

Incident Summary: Trench wall collapsed with an excavator performing work near the edge of trench.

Status: No injuries and no personnel in trench at the time of the incident.

Potential Mitigation(s):

- Ensure adequate protective systems are in place to mitigate cave-ins.
- Review classification of soil by Competent Person to determine location of heavy equipment operations.

Safety Alert

To our Overhead Electrical contractors:

Considering recent incidents and subsequent internal discussions, your attention to work methods involving conductor attachments on both Distribution and Transmission hardware is requested. Below you will find SDG&E Electric Overhead Construction Standards OH739.2 – OH739.5 which outlines the acceptable method for installing Distribution dead-end clamps on our overhead conductors. "Hand tighten U-bolt nuts and then alternately apply wrench until desired torque is achieved." Power tools (impact guns, etc.) are being used by some crews in the field to secure attachments to overhead conductors which is *not* an acceptable practice per SDGE OH Construction Standards.

Please review with all field leadership and field personnel performing work on the SDGE electrical system proper tightening and torquing sequences for all conductor attachments, to include, both Distribution and Transmission dead-end clamps, trunnion Clamp bolts, hotline clamps, and any other relevant conductor attachments being utilized. We would like all contractors to review the proper use and care of any power tools with all field personnel immediately and address any deviations from Standards or misuse of this tool on any conductor attachments.

Your continued partnership with SDG&E is valued and we appreciate your commitment to quality and safety in the work you perform.

SCOPE: THIS STANDARD SHOWS AND LISTS BOLTED, SIDE OPEN, STRAIN CLAMPS USED TO ATTACH ALUMINUM ALLOY CONDUCTORS TO DEADEND INSULATORS.

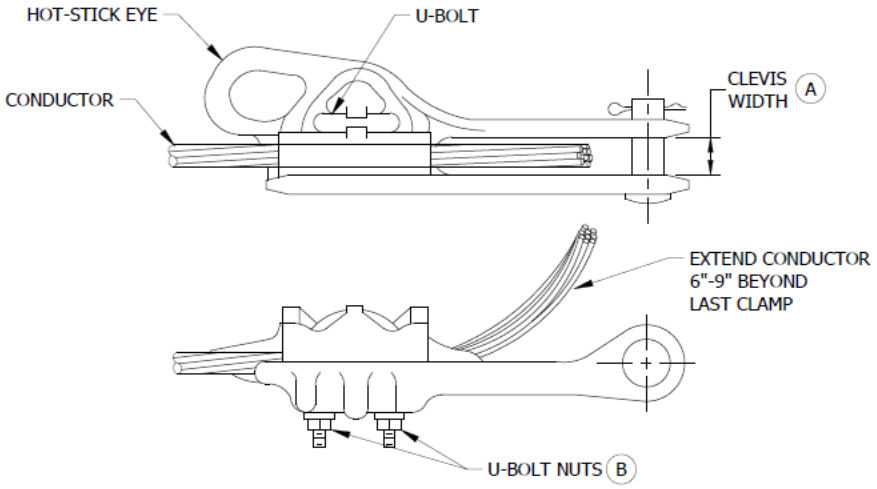

FIGURE 1
(S230464)

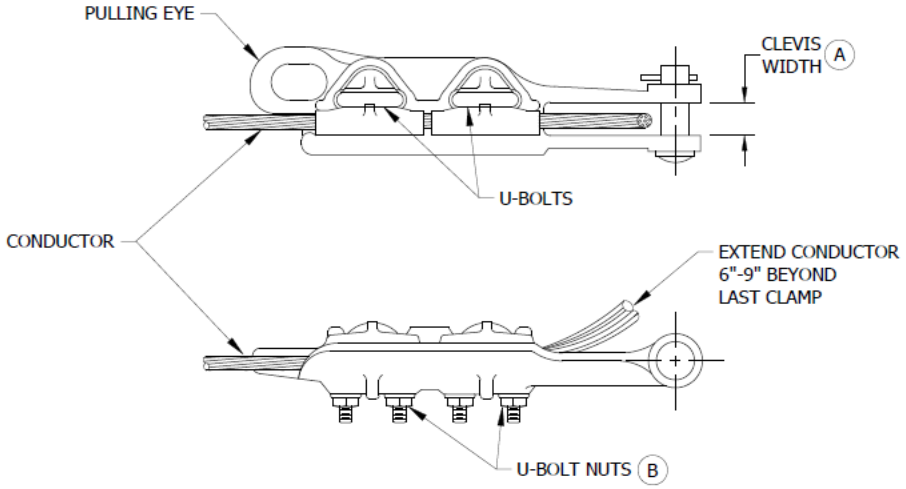

FIGURE 2
(S230512)

© 1998 - 2020 San Diego Gas & Electric Company. All rights reserved. Removal of this copyright notice without permission is not permitted under law.

REV	CHANGE	DR	BY	DSN	APV	DATE	REV	CHANGE	DR	BY	DSN	APV	DATE
C	DRAWING UPDATE	PEI	-	-	-	03/18/2019	F						
B	EDITORIAL CHANGES	-	GW	JS	MDJ	08/28/2017	E	FIGURE UPDATE	EDM	GLW	JES	CZH	10/12/2020
A	COMPLETELY REVISED	-	JC	IL	JS/MDJ	10/16/2015	D	TABLE UPDATE	EDM	JIK	JES	CZH	1/15/2020

X Indicates Latest Revision | Completely Revised | New Page | Information Removed

SDG&E ELECTRIC OVERHEAD CONSTRUCTION STANDARDS

12KV ALUMINUM SIDE OPEN STRAIGHT STRAIN CLAMPS
FOR ACSR/AW & 5005 ALUMINUM ALLOY CONDUCTORS

SHEET 2 OF 6

OH739.2

TABLE 1

WIRE SIZE									CLAMP RANGE (IN)		CLAMP DATA			STOCK NUMBER	DESIGN UNITS
ACSR/AW OR 5005 (AWG)				ACSR/AW				5005							
4 6/1 OR 7	2 6/1 OR 7	1/0 6/1 OR 7	3/0 6/1 OR 7	336.4 KCMIL 18/1	336.4 KCMIL 26/7	636 KCMIL 24/7	1033.5 KCMIL 45/7	394.5 KCMIL 19	MIN.	MAX.	BOLT SIZE	TORQUE (FT-LBS) (B)	CLEVIS WIDTH (A)		
-	-	-	-	-	-	X	-	-	.680	1.160	1/2	40	1	S230464	DE636
-	-	-	-	X	X	-	-	X	.440	.880	1/2	40	15/16	S230498	DE336
-	X	X	X	-	-	-	-	-	.316	.721	3/8	20	15/16	S230512	DE2 DE3/0

INSTALLATION:

(A) SEE CLAMP DATA COLUMN FOR CLEVIS WIDTH.

(B) HAND TIGHTEN U-BOLT NUTS AND TORQUE TO THE VALUES IN CLAMP DATA COLUMN.

BILL OF MATERIALS: NONE

NOTES:

I. DO NOT USE STRAIGHT STRAIN CLAMPS ON AWAC CONDUCTORS.

REFERENCE: NONE

© 1998 - 2020 San Diego Gas & Electric Company. All rights reserved. Removal of this copyright notice without permission is not permitted under law.

REV	CHANGE	DR	BY	DSN	APV	DATE	REV	CHANGE	DR	BY	DSN	APV	DATE
C	DRAWING UPDATE	PEI	-	-	-	03/18/2019	F						
B	EDITORIAL CHANGES	-	GW	JS	MDJ	08/28/2017	E	FIGURE UPDATE	EDM	GLW	JES	CZH	10/12/2020
A	COMPLETELY REVISED	-	JC	IL	JS/MDJ	10/16/2015	D	TABLE UPDATE	EDM	JIK	JES	CZH	1/15/2020

X Indicates Latest Revision | Completely Revised | New Page | Information Removed

SHEET 3 OF 6

SDG&E ELECTRIC OVERHEAD CONSTRUCTION STANDARDS

12KV ALUMINUM SIDE OPEN STRAIGHT STRAIN CLAMPS FOR ACSR/AW & 5005 ALUMINUM ALLOY CONDUCTORS

OH739.3

SCOPE: THIS STANDARD SHOWS AND LISTS STRAIN CLAMPS USED TO ATTACH ALUMINUM ALLOY CONDUCTORS TO DEADEND INSULATORS.

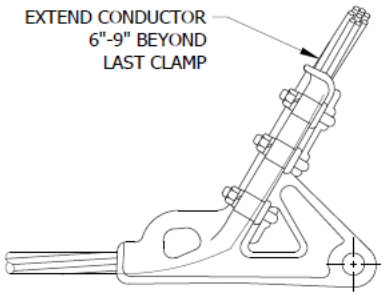

FIGURE 1

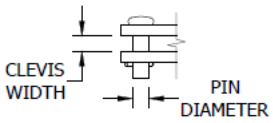

DETAIL 1

TABLE 1

WIRE SIZE									CLAMP RANGE (IN)		CLAMP DATA			STOCK NUMBER	DESIGN UNITS
AWAC (I)		ACSR													
2		1/0	3/0	336.4 MCM		397.5 MCM	636 MCM	1033.5 MCM			CLEVIS WIDTH (IN)	PIN DIAMETER	TORQUE (FT-LBS)		
5/2	3/4	6/1	6/1	18/1	26/7	26/7	24/7	45/7	MIN.	MAX.					
X	X	--	--	--	--	--	--	--	.20	.57	3/4	5/8"	40	S230672	DE2W
--	--	X	X	--	--	--	--	--	.30	.75	15/16	5/8"	40	S231616	DE1/0W DE3/0W
--	--	--	--	X	X	X	--	--	.46	.94	1 1/16	5/8"	40	S231700	DE336W DE397W
--	--	--	--	--	--	--	X	X	.71	1.318	1 7/16	3/4"	60	S230686	DE636W DE1033W

INSTALLATION:

A. HAND TIGHTEN U-BOLT NUTS AND THEN ALTERNATELY APPLY WRENCH UNTIL DESIRED TORQUE IS ACHIEVED.

BILL OF MATERIALS: NONE

NOTES:

(I) THESE STRAIN CLAMPS ARE TO BE USED FOR AWAC CONDUCTORS IN THE DISTRIBUTION SYSTEM.

REFERENCE: NONE

© 1998 - 2020 San Diego Gas & Electric Company. All rights reserved. Removal of this copyright notice without permission is not permitted under law.

REV	CHANGE	DR	BY	DSN	APV	DATE	REV	CHANGE	DR	BY	DSN	APV	DATE
C	DRAWING UPDATE	PEI	-	-	-	03/18/2019	F						
B	EDITORIAL CHANGES	-	GW	JS	MDJ	08/28/2017	E	FIGURE UPDATE	EDM	GLW	JES	CZH	10/12/2020
A	COMPLETELY REVISED	-	JC	IL	JS/MDJ	10/16/2015	D	TABLE UPDATE	EDM	JIK	JES	CZH	1/15/2020

X Indicates Latest Revision | Completely Revised | New Page | Information Removed

SHEET 4 OF 6

SDG&E ELECTRIC OVERHEAD CONSTRUCTION STANDARDS

DEADEND ALUMINUM ALLOY STRAIN CLAMPS

OH739.4

SCOPE: THIS STANDARD SHOWS AND LISTS BOLTED STRAIN CLAMPS USED TO ATTACH COPPER CONDUCTORS TO DEADEND INSULATORS.

FIGURE 1
SINGLE U-BOLT CLAMP FOR #6
SOLID COPPER AND COPPER
CLAD WIRE ONLY (S231604)

FIGURE 2
DOUBLE U-BOLT CLAMP
FOR #6-3 STR - 4/0 COPPER AND
COPPER CLAD WIRE ONLY (S230368)

TABLE 1

WIRE SIZE										CLAMP RANGE (IN)		U-BOLT TORQUE (FT-LBS)	CLAMP P/N (STOCK#)	DESIGN UNITS
COPPER						CW/CU								
6 SOL	6 3-STR	4 3-STR	2 3-STR	1/0 7-STR	4/0 7-STR	6A 1/2	4A 1/2	4D 2/1	4N 5/2	MIN.	MAX.			
X	-	-	-	-	-	-	-	-	-	0.16	0.40	40	S231704	DE6C
-	X	X	X	X	-	X	X	X	X	0.18	0.46	20	S230368	DE1/0C
-	-	-	-	X	X	-	-	-	-	0.36	0.60	40	S230402 (X)	DE4/0C

INSTALLATION:

A. HAND TIGHTEN U-BOLT NUTS AND THEN ALTERNATELY APPLY WRENCH UNTIL DESIRED TORQUE IS ACHIEVED.

BILL OF MATERIALS: NONE

NOTES:

I. NOT TO BE USED FOR TRANSMISSION APPLICATIONS.

II. THE USE OF THE SINGLE U-BOLT CLAMP BECAME EFFECTIVE ON 11/01/17.

(X) THIS ITEM IS EXEMPT.

REFERENCE: NONE

© 1998 - 2020 San Diego Gas & Electric Company. All rights reserved. Removal of this copyright notice without permission is not permitted under law.

REV	CHANGE	DR	BY	DSN	APV	DATE	REV	CHANGE	DR	BY	DSN	APV	DATE
C	DRAWING UPDATE	PEI	-	-	-	03/18/2019	F						
B	EDITORIAL CHANGES	-	GW	JS	MDJ	08/28/2017	E	FIGURE UPDATE	EDM	GLW	JES	CZH	10/12/2020
A	COMPLETELY REVISED	-	JC	IL	JS/MDJ	10/16/2015	D	TABLE UPDATE	EDM	JIK	JES	CZH	1/15/2020

X Indicates Latest Revision | Completely Revised | New Page | Information Removed

SHEET 5 OF 6

SDG&E ELECTRIC OVERHEAD CONSTRUCTION STANDARDS

DEADEND CLAMPS, STRAIGHT LINE
FOR COPPER CONDUCTORS

OH739.5

INCIDENT ALERT

	Switching Error Details
Date	07/23/21
Approximate Time	11:00
What Happened?	Crew was tasked with a job to change out primary fusing to the CMU style fuse. While QEW1 and QEW2 were in the bucket truck installing a mechanical jumper to jumper out the west side 30A fuse. The east side 30A fuse inadvertently opened (bad latch on existing cut out in the field), causing an unplanned outage to two OH transformers downstream. The crew closed the open 30A fuse, without the OK from Sta L to do so, restoring all service immediately. Sta L called the WF to give the OK to close 30A fuse as the step was already completed. No injuries occurred.
Outcome of the error?	The 30A fuse that opened due to a bad latch caused an unplanned outage to two OH downstream transformers. The act of closing in the 30A fuse without an OK from Sta L is a switching violation.
Talking Points?	No injuries due to a bad cut out body and door opening is what went well during the incident. The mitigations of old or faulty equipment on the system is in place, this the very reason the crew was task with this job.
References: Operating Procedures/Standards	Violating standard operating procedure of operating/changing the status of equipment without an OK Authorization.

August 5, 2021

Contractor Safety Talks

Special Points of Interest:

The State and County's Coronavirus controls are evolving but we will continue to demonstrate safe work practices for the safety of our employees and customers.

For SDG&E's current COVID-19 guidelines, please see the latest communication on the ISN bulletin board and also communicated via email from Supply Management.

Vehicle and Heavy Equipment Operation

Did you know?

The U.S. Bureau of Labor Statistics reports that heavy equipment operations accounts for 400 deaths per year in the construction industry.

Heavy equipment accidents can happen due to several reasons, however, most are deemed to have been caused by operator negligence.

Vehicle and heavy equipment operation poses several hazards to both workers and the public. These hazards include equipment failures, collisions with other vehicles, falls from heights, backing incidents, trailers, load securements, and overhead obstructions.

To avoid equipment failures, all equipment should be inspected prior to use so as to identify any mechanical problems. Operators should be qualified to operate their respective vehicle or heavy equipment, should employ defensive driving techniques, and follow all traffic laws to mitigate collisions. When climbing heavy equipment employees should maintain three points of contact and avoid slippery surfaces to mitigate falls from heights. Operators should perform walk-arounds when spotters are unavailable and ensure backup alarms are working when applicable to avoid backing incidents. Trailer hazards are mitigated when connections and loads are adequately secured prior to vehicle or heavy equipment operation. Finally, avoiding overhead obstructions requires operators to maintain proper Minimum Approach Distances (MAD) from overhead electrical conductors, and it requires that operators ensure all extremities have been properly stored to avoid overhead obstructions during transit (i.e. bridges and overpasses).

FAQ

Q: How do I learn more about safe heavy equipment operation and where can I find additional information on Heavy Equipment Operations and SDG&E's expectations?

A: Go to Cal/OSHA Title 8 regulations, the Class 1 Contractor Safety Manual, or your company written safety programs.

OBSERVATIONS FROM THE FIELD

Over the last 30 days SDG&E safety observers performed jobsite inspections on almost all SDG&E jobsites and observed 27,202 construction activities. Of these there were 332 at-risk conditions documented and corrected in the field. Of the at-risk conditions observed, 89% were low risk, with the majority of them involving proper use of PPE. There were 34 medium at-risk observations and 1 high risk observation during the month.

At-Risk Observations (July 2021)	At-Risk Behaviors
332	The majority of at-risk conditions were in the PPE category: safety glasses, gloves and face shields. Other notable at-risk conditions involved vehicle operation and barricades and warnings..

NOTABLE AT-RISK OBSERVATIONS

Medium-High Risk Observations (July 2021)	Recommendation/Mitigation
Worker in a 16 ft. deep excavation did not have an attendant, proper barricading, and no air testing was being performed.	Crews must have confined space entry permits prior to entering a confined space. Crews ensure atmospheres are tested and monitored if a hazardous atmosphere is possible.
Crew was disconnecting live line over a roadway without secondary safeties.	Ensure crews installs adequate safeties prior to any placing any attachments on overhead conductors.
Crew tried attaching rigging to a tooth of a backhoe bucket when maneuvering plates.	Crews ensure proper attachment points are used during suspend load operations.
Crew observed performing hot work without hot work permit and safe fire mitigation protocols in place.	Crews performing any activity that involves an open flame or produces heat and sparks will need a hot work permit prior to performing any work. Crews follow all proper fire mitigations procedures.
A portion of an excavation was left un-shored and a small fissure developed near the exposed gas main.	Crew ensures adequate protective systems are in place to mitigate cave-ins on excavations deeper than 5 feet.

MONTHLY INCIDENTS/NEAR MISSES

Incidents (July 2021)	Recommendation/Mitigation
Electric Incident—Crew had an unplanned outage while replacing jumpers.	Ensure proper work procedures are following, as detailed in the JHA. Ensure crews double-verify critical work.
Electric Incident—Crew inadvertently de-energized two transformers causing an unplanned outage.	Ensure proper work procedures are following, as detailed in the JHA. Ensure crews double-verify critical work.
Switching Error (Electric Incident)—While a crew was installing a jumper, a fuse inadvertently opened causing an unplanned outage.	Ensure proper work procedures are following, as detailed in the JHA. Ensure crews double-verify critical work.
Fire (Good Catch)—Digging crews digging pole hole when they heard a loud pop and discovered the transformer to the adjacent pole malfunctioned, causing sparks to fall creating a brush fire around the base of the pole.	Ensure all fire mitigation procedures are followed. Ensure fire tools are readily available.
Electric Incident–Digging crew was responsible for damaging an electrical line while moling.	Ensure marked utilities are identified and protected.

***Four* electric and *zero* gas incidents occurred in July 2021. One switching error occurred in July 2021.**
**SIF Potential Event = Serious Injury/Fatality Potential*

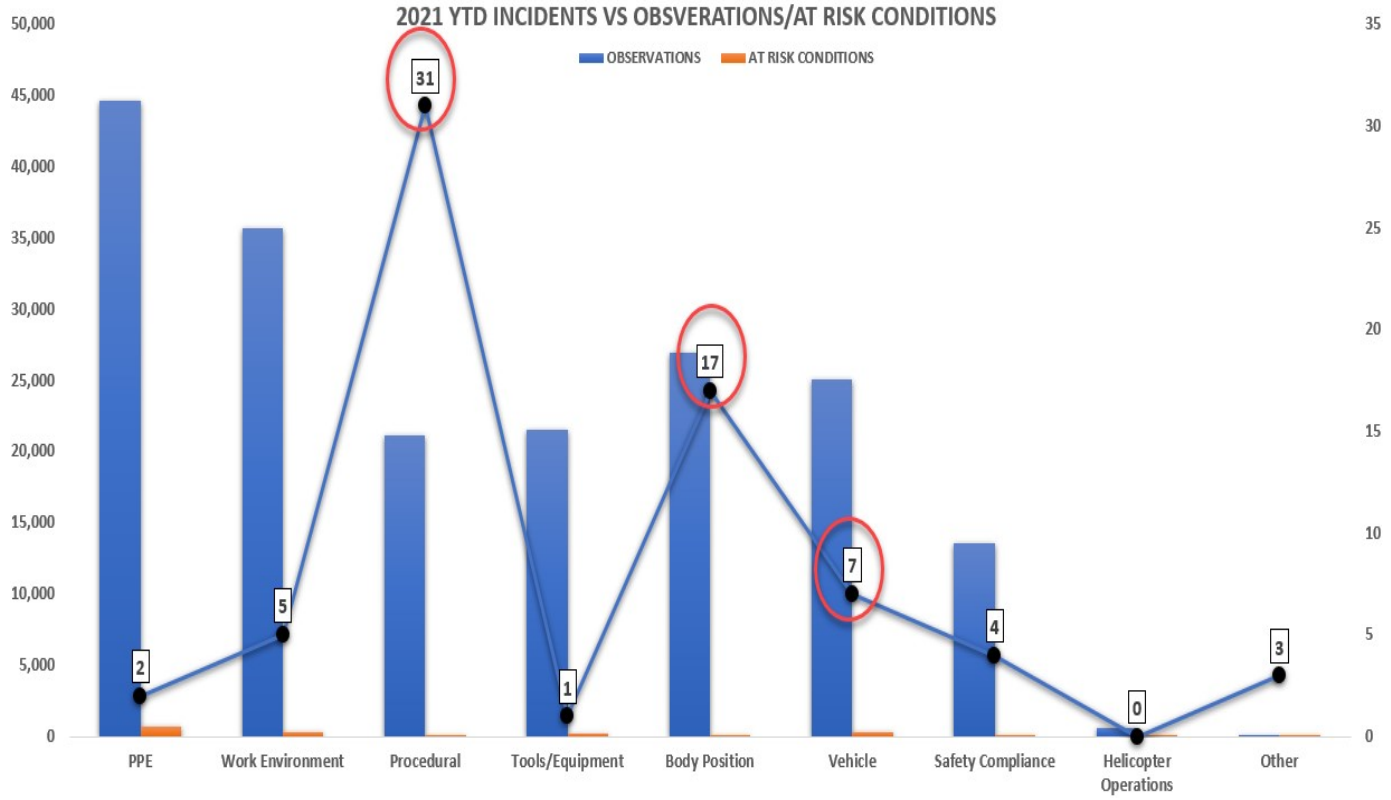

FUTURE FOCUS AREAS

When looking at the past incidents, SDG&E recommends targeting mitigation measures for:

- Procedural gaps
- Body position
- Work Environment

Let us know what you're seeing in the field so we can make our observations even better. Please make sure to visit our bulletin board on ISN and read the latest communications at https://www.isnetworld.com/BulletinBoard/asBulletinBoard.aspx.

Questions or comments? General questions: SDGEContractorSafety@semprautilities.com
Reporting Incidents: SDGEContractorIncidents@sdge.com